micanan

Serial #: _____

Installation Date: _____

Wiring Diagram: _____

PRO-LJ

installation & instruction manual

TABLE OF CONTENTS

⚠ WARNING

DO NOT CONNECT TO ELECTRICAL POWER DURING INSTALLATIONOR SERVICING OF OPERATOR

IMPORTANT

FOR ANY QUESTIONS CONCERNING THE SAFETY OR OPERATION OF THIS OPERATOR PLEASE CONTACT MICANAN SYSTEMS AT 1-877-888-1116 **SAVE THESE INSTRUCTIONS**

VERIFICATION OF OPERATOR AND HARDWARE

Upon delivery of your MICANAN SYSTEMS medium-duty jackshaft door operator, please inspect the unit carefully for damage. Verify that operator horsepower, voltage, phase and amperage correspond to available power supply and door application. Check that along with your operator you have received the following standard hardware.

1 x OPEN/CLOSE/STOP 3-button control station:

1 x #41 Drive chain package : 4' (1.2m) c/w #41 connecting link

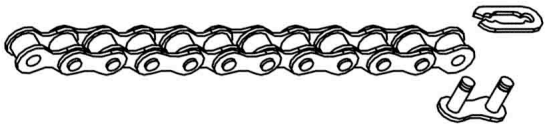

1 x Drive Sprocket 41B12 x 1" c/w 2 set screws and ¼" x 1-1/4" keyway

1 x Door Sprocket 41B32 x 1" c/w 2 set screws and ¼" x 1-1/4" keyway
Note: Sprocket size and bore may vary according to door size and type, shaft size and drum diameter

1 x Chain keeper

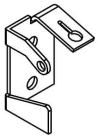

1 x Keyring

4 x 3/8" bolt, hex nut, lock washer and flat washer

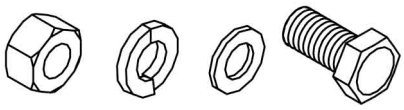

1 x pocket wheel hand chain ***(Model PRO-LH)*** (2 x door height less 4' (1.2m))

1 x Warning sign

1 set of Micanan photocells (***supplied when operator ordered with interface module or logic board controls***)

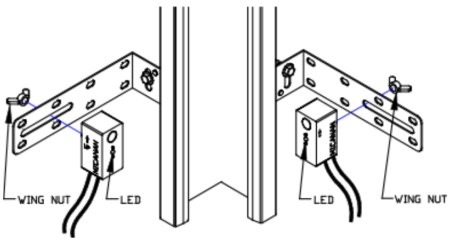

PRO-LJ, PRO-LH SPECIFICATIONS

PRO-LJ and PRO-LH medium duty jackshaft operators are designed for commercial high lift, vertical lift, rolling doors and rolling grilles provided that doors are driven by a drive shaft with low duty cycles. Model PRO-LH is essentially the same as model PRO-LJ with the exception that the PRO-LH operator incorporates a chain hoist for manual operation of the door.

STANDARD OPERATOR WEIGHT: ***45-50 LBS***

MOTOR: Intermittent duty 1000 RPM motor with high starting torque.
- Thermally protected by a built-in thermostat that cuts power to the motor and control circuit when overheating.
- Horsepower: 1/2HP - Voltage: 115V 1-phase (60Hz) 220V 1-phase (50Hz)
  230V 1-phase (60Hz) 380V 3-phase (50Hz)

IMPORTANT NOTE
THIS MEDIUM DUTY OPERATOR IS DESIGNED TO OPERATE
A MAXIMUM OF 15 COMPLETE CYCLES PER HOUR.

REDUCTION: Primary: (4L) V-belt and pulleys (1.5" to 7" diameter), Secondary: #41 chain and sprockets

OUTPUT SHAFT SPEED: 58 RPM

BRAKE : Solenoid actuated drum and brake shoe braking system to prevent coasting and maintain door position.

WIRING TYPE (3 OPTIONS):
Option 1: **Limited Duty logic board Smart 5.0 (UL325 (2010) compliant)**. Note: Micanan compatible primary entrapment device must be connected for B2 or TS (momentary or timer activation on close) feature.
Option 2: **Relay logic controls with Interface Module (UL325 (2010) compliant**). C2 Standard factory wiring (constant pressure on close, momentary contact on open and stop). If momentary contact on close (B2) wiring is desired, connect loose "purple" wire to terminal #5. Note: Micanan compatible primary entrapment device must be connected for B2 (momentary activation on close) feature.
Option 3: **Standard relay logic controls (not UL325 (2010 compliant, not available in US)** C-2 Wiring constant pressure on *close, momentary contact on open and stop. NOTE: If momentary contact on close (B2) wiring is desired, connect* loose "purple" wire to terminal #5.

TRANSFORMER: 24VAC control circuit, supplies power to drive control relays with 15VA power available for external devices.

LIMIT ADJUSTMENT: 4 micro switches that control door travel. These limit switches are activated by fully adjustable screw type cams.

EMERGENCY DISCONNECT: Floor level cable disconnect system with electrical cut-out feature allows person to manually operate the door by hand (PRO-LJ) or by chain hoist (PRO-LH) in case of emergency.

CLUTCH: Adjustable friction clutch to minimize damage to door operator, door or vehicles when obstruction occurs.

OPERATOR DIMENSIONS:

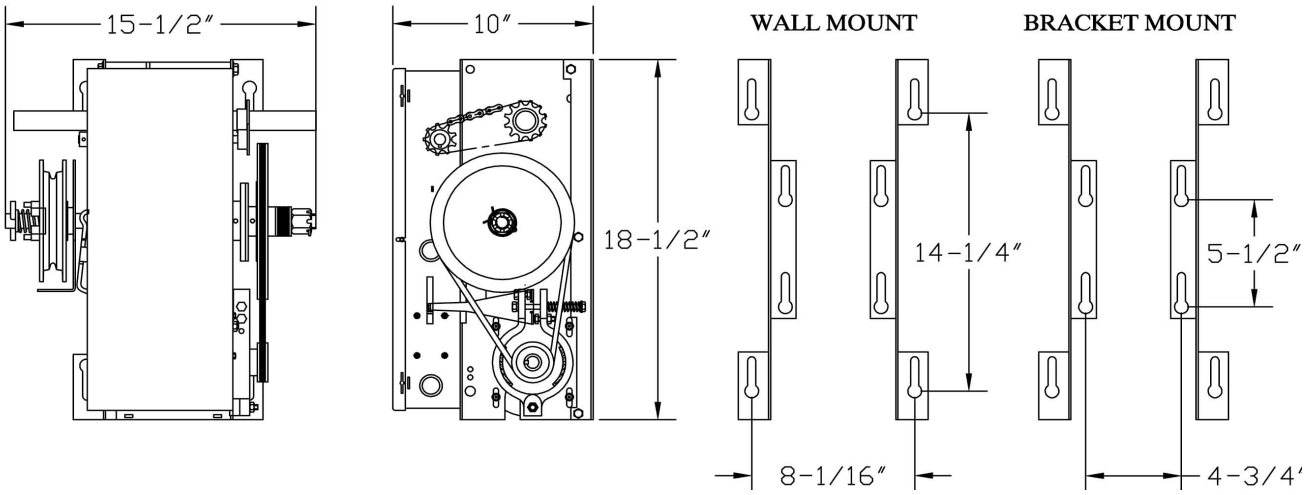

IMPORTANT SAFETY INSTRUCTIONS

⚠WARNING

TO REDUCE THE RISK OF INJURY OR DEATH:

- **READ AND FOLLOW ALL INSTRUCTIONS**
- Never allow children to operate or play with door controls. Keep the remote control (where provided) away from children.
- Personnel should keep away from a door in motion and keep the moving door in sight until it is completely closed or opened. NO ONE SHOULD CROSS THE PATH OF A MOVING DOOR.
- Test the door's safety features at least once a month. After adjusting the limit of travel, retest the door operator's safety features. Failure to adjust the operator properly may cause severe injury or death.
- For products having a manual release, if possible, use the manual release only when the door is closed. Use caution when using this release when the door is open. Weak or broken springs may cause the door to fall rapidly, causing severe injury or death.
- KEEP DOORS PROPERLY OPERATING AND BALANCED. See Door Manufacturer's Owner's Manual. An improperly operating or balanced door could cause severe injury or death. Have trained door systems technician make repairs to cables, spring assemblies, and other hardware.
- Press the "OPEN" device or use emergency disconnect mechanism if a person is trapped under the door.
- **SAVE THESE INSTRUCTIONS.** The owner or users must understand the safety and operation of door system. Insure that this installation manual be located close to the door system.

IMPORTANT INSTALLATION INSTRUCTIONS

- **READ AND FOLLOW ALL INSTALLATION INSTRUCTIONS**
- Commercial door operators are never to be installed on a residential installation
- Install only on a properly operating and balanced door. A door that is operating improperly could cause severe injury. Have qualified service personnel make repairs to cables, spring assemblies, and other hardware before installing the operator.
- Remove all pull ropes and remove, or make inoperative, all locks (unless mechanically and/or electrically interlocked to the power unit) that are connected to the door before installing the operator.
- Install the door operator at least 8 feet or more above the floor if the operator has exposed moving parts.
- Do not connect the operator to the source of power until instructed to do so.
- Locate the control station: (a) within sight of the door, (b) at a minimum height of 5 feet so that small children cannot reach it, and (c) away from all moving parts of the door.
- Install the Entrapment Warning Placard next to the control station in a prominent location.
- For products having a manual release, instruct the end user on the operation of the manual release.
- Install non-contact entrapment protection devices (photocells) and/or contact entrapment protection devices (reversing edges). Note: photocells should be installed at no more than 6" from the floor. Edges should be installed on the leading edge of the door.

INSTALLATION INSTRUCTIONS

⚠ WARNING

DO NOT INSTALL THIS OPERATOR
BEFORE READING THIS MANUAL CAREFULLY.

Note: - Installation of operator must be done by a qualified installer. Door must be properly installed and working smoothly. Remove all door locks prior to installation.

- The PRO-LJ and PRO-LH operators have dual output shafts and may be mounted on left (standard) or right hand side of door. If handing of operator must be reversed, loosen set screws, remove drive sprocket and keyway and install on opposite side of drive shaft.

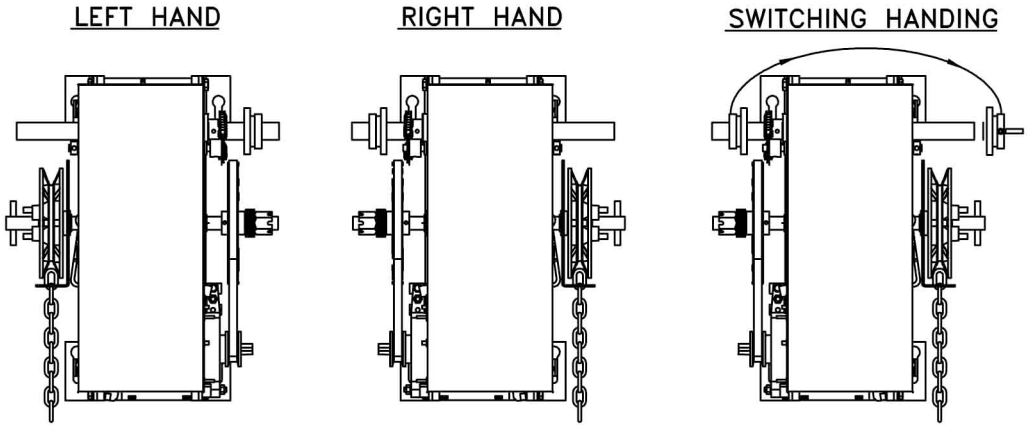

- For the PRO-LH operator which incorporates a chain hoist mechanism the handing of the operator must be stated at time of order. Depending on installation, if handing of chain hoist is not correct the hand chain may hang in door opening. If this is the case, swing chain off to the side and hook it over the top of the door jamb. Do not attempt to reverse chain hoist on site.

1. Install control station away from all moving door parts, within sight of the door and a minimum of 5 ft (1.5 m) from the ground.

2. Install entrapment warning sign next to control station.

3. As a general rule, the door operator should be installed below the drive shaft and as close to the door as possible. The ideal distance between the operator drive shaft and the door shaft is approximately 12” (30cm) to 15” (38cm). The operator may be wall/bench mounted or bracket /shelf mounted. These two mounting configurations are shown below:

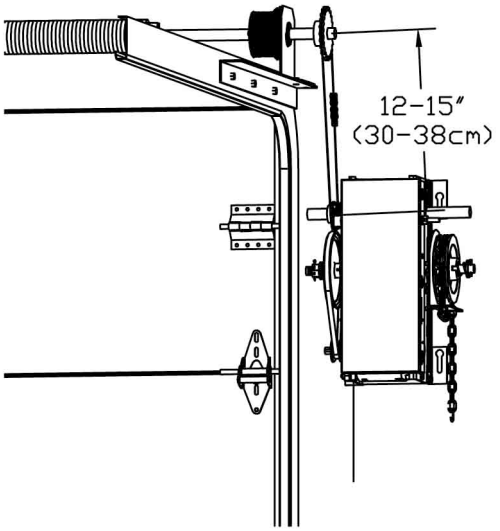

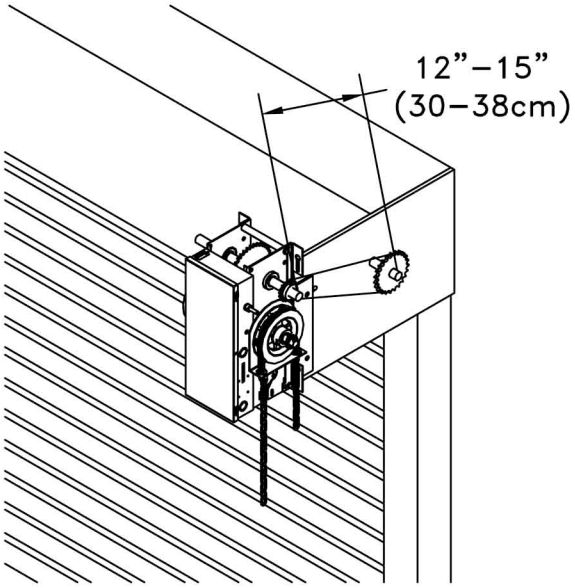

4. Mount the operator to the wall, hood or bench with 3/8” bolts, nuts and washers provided or with lag bolts and shields if installation requires it. Make sure that operator is secured but do not tighten bolts.

5. Place door sprocket on door shaft and align with operator drive sprocket but do not insert keyway or set screws.

6. If an optional chain spreader has been ordered with your operator, install as shown below:

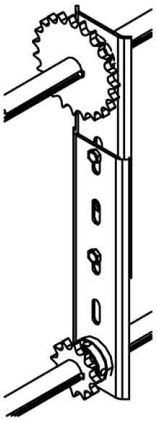

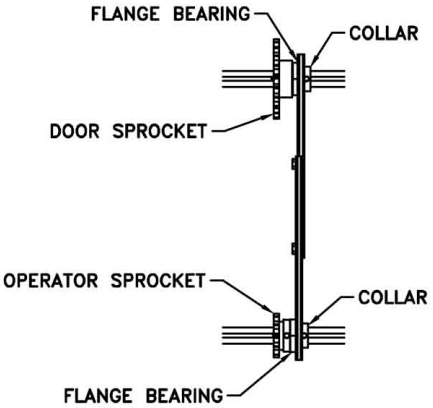

7. Install drive chain over sprockets, cut to a suitable length and connect with connecting link.

8. Lower or raise operator to adjust chain tension so that there is no more than ¼” chain slack between sprockets. Tighten operator mounting bolts.

9. Carefully re-align sprockets, if necessary and secure keyway and set screws.

10. **(For the PRO-LH model)** Install hand chain by wrapping it through chain guard holes and pocket wheel. Allow chain to hang down towards floor. Cut chain and connect so that chain is 2’ to 3’ from the floor.

11. Install chain keeper to wall near hand chain at approximately 4’ from floor. Run disconnect chain through keyhole of chain keeper and cut excess chain links if required. Attach keyring to end of disconnect chain.

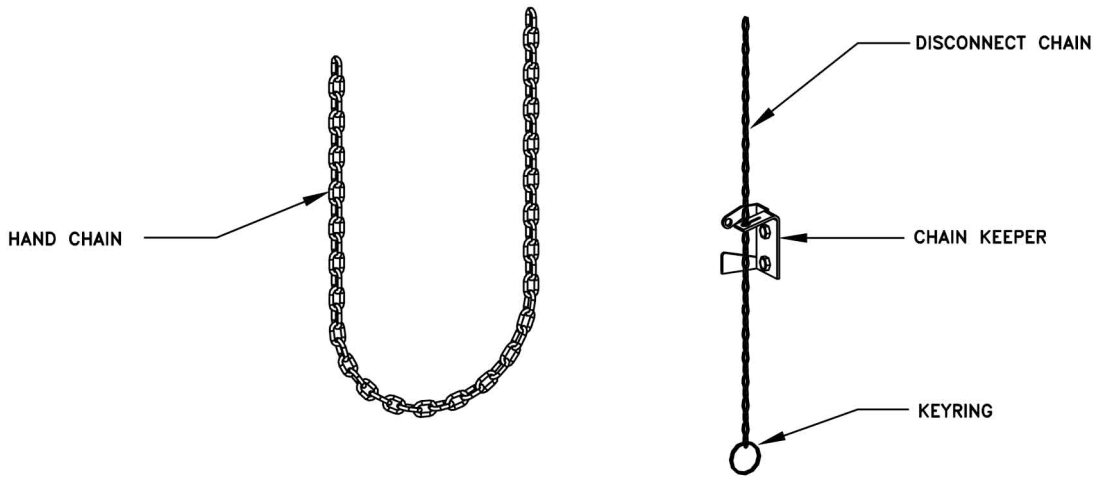

12. If an ***optional*** floor level disconnect lever was ordered in lieu of the chain keeper, mount to wall with suitable hardware. Attach both chains together using keyring provided. Allow disconnect chain to be slightly slack when lever is in the up position.

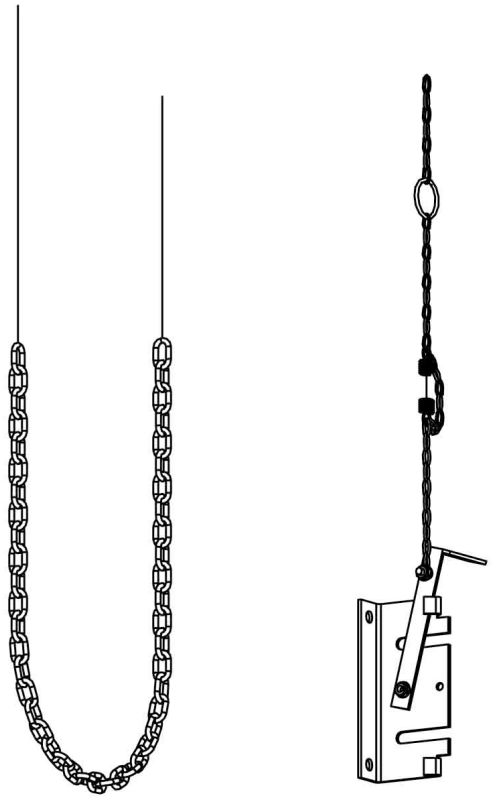

ELECTRICAL CONNECTIONS

THERE ARE 3 POSSIBLE ELECTRICAL CONTROL CONFIGURATIONS FOR THIS OPERATOR:

A) Standard relay logic controls (not UL325 (2010) compliant, not available in US). Refer to Section A for electrical connections. Refer to electrical drawings inside your operator control box or generic drawings MSLHR-WW, MSLH2-WW or MS300LH-WW in the electrical drawings section at the end of this manual.

B) Relay logic controls with Interface Module (UL325 (2010) compliant. Refer to Section B for electrical connections. Refer to electrical drawings inside your operator control box or generic drawings MSLHR-IM-WW or MSLH2-IM-WW or MS300LH-IM-WW in the electrical drawings section at the end of this manual.

C) Limited duty logic board Smart 5.0 (UL325 (2010) compliant). Refer to Section C for electrical Connections and logic board instructions. Refer to electrical drawings inside your operator control box or generic drawings MSLLHR-WW or MSLLHR220-WW, in the electrical drawings section at the end of this manual.

IMPORTANT

- MICANAN HIGHLY RECOMMENDS THAT EACH INDIVIDUAL COMMERCIAL DOOR OPERATOR HAVE IT'S OWN DEDICATED POWER SUPPLY
- MICANAN HIGHLY RECOMMENDS THAT EACH INDIVIDUAL COMMERCIAL DOOR OPERATOR HAVE AN EXTERNAL CIRCUIT BREAKER OR FUSED DISCONNECT

⚠ WARNING

COMPARE AVAILABLE POWER SUPPLY VOLTAGE TO OPERATOR NAMEPLATE PRIOR TO ELECTRICAL CONNECTION. FAILURE TO CONNECT APPROPRIATE POWER SUPPLY VOLTAGE MAY CAUSE SERIOUS DAMAGE TO OPERATOR.

Refer to electrical diagrams inside control box cover or at the end of this manual prior to connection of power supply or control station.

⚠ WARNING

TO REDUCE THE RISK OF INJURY OR DEATH:

ALL ELECTRICAL CONNECTIONS SHOULD BE MADE BY A QUALIFIED SERVICE PERSON

DO NOT ATTEMPT TO MAKE ELECTRICAL CONNECTIONS TO OPERATOR UNLESS POWER SUPPLY HAS BEEN DISCONNECTED AT FUSE BOX

OPERATOR MUST BE CONNECTED IN ACCORDANCE TO LOCAL ELECTRICAL CODES AND GROUNDED TO GREEN GROUND LUG LOCATED INSIDE CONTROL BOX

SECTION A: *PRO-LJ, PRO-LH* *Standard relay logic controls (not UL325 (2010) compliant, not available in US)*

CONNECTION OF POWER SUPPLY AND CONTROL STATION

POWER WIRING: Use 1-1/8" (2.85 cm) diameter holes for all power wiring.

1. Single phase: Connect single phase power supply to terminals L/L1 (line) and N/L2 on three-pole power terminal strip.
2. Three-phase (for 1/2HP 380V 50Hz): Connect three phase power supply to terminals L1, L2 and L3 on three-pole power terminal strip.

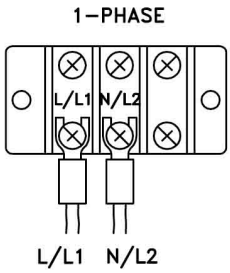

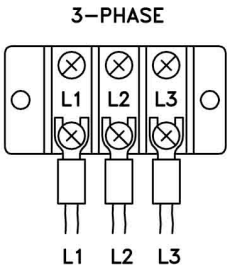

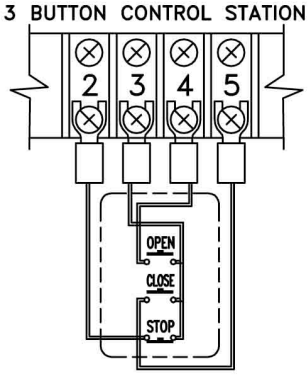

CONTROL WIRING: Use 7/8" (2.22 cm) diameter holes for all control wiring.
Note: Do not run control wires and power wires in same conduit.

- Install control station within clear sight of door but away from all moving parts of door or hardware. Install Entrapment warning sign next to control station. Connect 3-button (open/close/stop) push button station to terminals 2, 3, 4 and 5. Refer to electrical diagram for connection of two 3-button stations.

NOTE: After electrical connections are made, manually move door to mid-position and, using the control station press the "Open" button for several seconds and then press the "Stop" button. If door did not move in correct direction verify wiring control station. For 3-phase (380V 50Hz) operators, if door still moves in wrong direction reverse any two of the three incoming power supply leads to correct rotation.

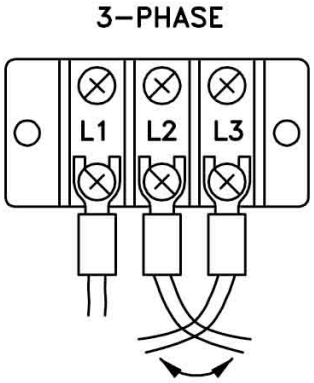

LIMIT SWITCH ADJUSTMENT

- Adjust Limit switches as explained in the "Limit switch adjustment section" further in this manual.

CONNECTION OF A REVERSING EDGE DEVICE AND CONTROL ACCESSORIES

1. **Reversing Edge device** (must be normally open contact):
   Note: If the door is controlled by any device or wired in such a manner that the door is not controlled by constant pressure on close then an appropriate reversing edge must be installed.

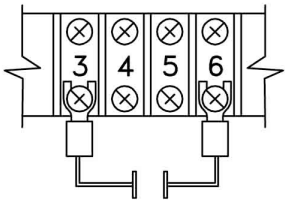

2. **External interlock:** Remove jumper between terminals 1 and 2 and wire a N.C. interlock contact between these two terminals.

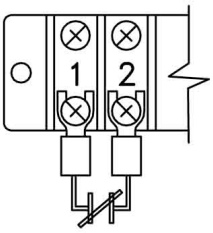

3. **Radio control receiver**: Wire standard radio receiver to separate radio strip on side of control box or to terminals 7, 8 and 9 on control terminal strip inside control box.

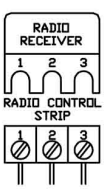

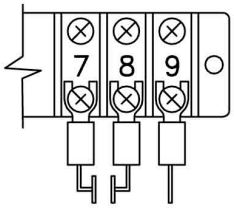

4. **Single button open/close device:** Wire to terminals 7 and 8 on control terminal strip.

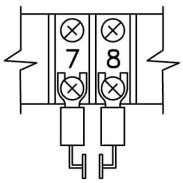

5. **Loop detectors, standard photocells (with a N.O. contact) and other reversing devices:** Wire to terminals 3 and 6 on control terminal strip.

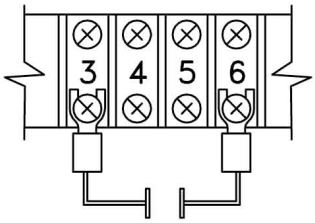

6. **24 Volt power**: Wire to terminals 1 and 9 on control terminal strip

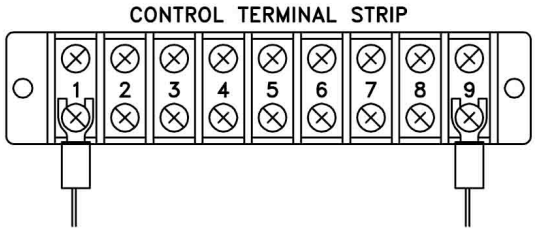

SECTION B: *PRO-LJ(M), PRO-LH(M) Relay logic controls with Interface Module (UL325 (2010) compliant)*

Operator electrical connections and start-up instructions

NOTE: THIS OPERATOR COMES WITH AN INTERFACE MODULE INTEGRATED INTO THE CONTROL CIRCUIT. THE PURPOSE OF THE INTERFACE MODULE IS TO ALLOW FOR FAILSAFE MONITORING OF A MICANAN COMPATIBLE SAFETY DEVICE AS PER UL 325 (2010) REQUIREMENTS.

Important: Follow these steps carefully and in the order shown

1) Connect Power supply:
Single phase: Connect single phase power supply to terminals L/L1 and N/L2 on the 3-pole power terminals strip.
3-phase (380V 50Hz): Connect 3-phase power supply to terminals L1, L2 and L3 on the 3-pole power terminal strip.

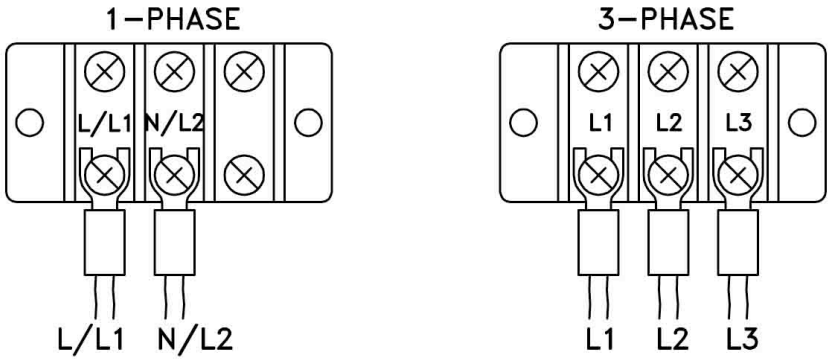

2) Connect Push-button station for installation purposes (single phase or 3-phase):
Connect open/close/stop push button station to terminals T2 (stop), T3 (common), T4 (open) and T6 (temporary CP on close).

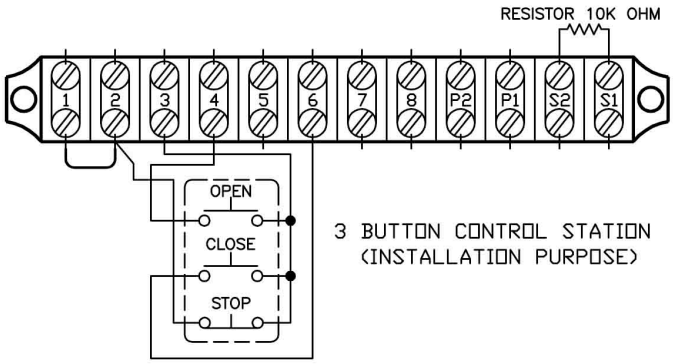

3) Verify motor direction:
After the electrical power connections are made and push button station is connected, manually move the door to mid-position. Press Close button for several seconds and then press stop button. If door did not move in correct direction (or if limit cams not moving in correct direction towards the close limit switch) see below:

Single phase operators: The operators leave the factory with correct motor and limit shaft direction according to standard door installations. However, for special fire door, thru- wall mounting or other special door applications, the motor direction and limit switch direction may need to be reversed. To reverse the motor rotation, interchange Red and Yellow wires on the motor capacitor located in the control box.

3-phase operators (1/2 HP 380V 50Hz): If door moves in wrong direction, turn off incoming power and reverse any two of the three incoming power supply leads to correct rotation. Press the open button and then activate the open limit to ensure door stops. If door does not stop, interchange grey and red wires on open and close limits. Interchange white and grey wires on advanced open and advanced close limits. Remove blue wire from advanced open limit and place it on N.O pin of advanced close limit.

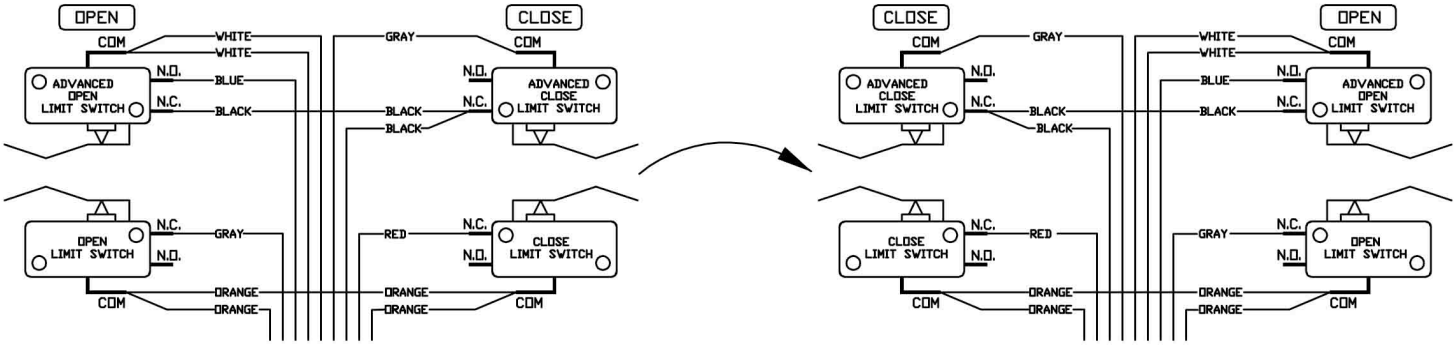

4) Adjust limit switch cams:
Using the open/close/stop push button station move door to fully closed and fully open oppositions and set limit cams to correct position. (See Limit adjustment section C further in this manual for complete detail on the end of travel limit adjustments).

5) Activate Interface module:
After adjusting the open and close limits and verifying the motor rotation, open the door to the full-open position using the open push button (Figure below on left).
At this point the close pushbutton wire must now be moved from terminal T6 to T5. Now connect the black wire (with blue label) to terminal T1 as shown in figure below on right.
Note: ***Ensure the door is in the full open position before connecting the black wire. If door is not in full open position and monitored photo-eyes or safety edge are not connected and operational then door will immediately move in the open direction.***

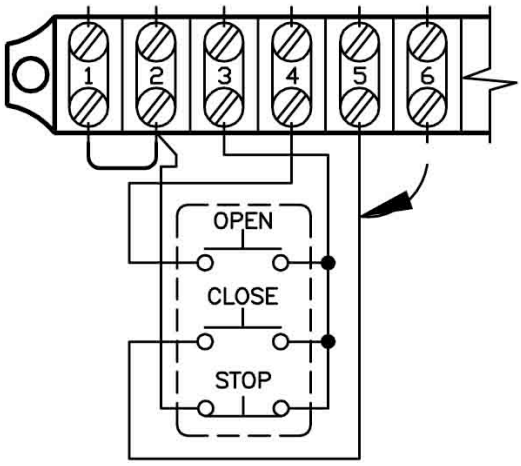

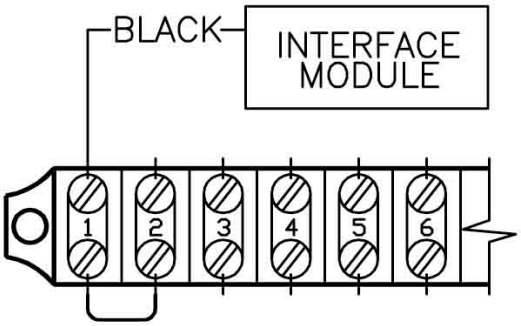

6) Connect safety devices

Failsafe feature: A monitored failsafe safety feature is built into the operator. The operator has provisions to connect one primary monitored safety device as well as one or more non-monitored safety device(s).

Primary monitored safety device:

MICANAN monitored failsafe photo beams or MICANAN compatible monitored failsafe devices must be connected to terminals P1 and P2 if momentary close on pushbutton is required (B2 mode). If not connected, door can only be closed by constant pressure on close pushbutton. If constant pressure on close pushbutton is removed before door reaches full closed position, then door reverses to full open.

Note: Only one monitored failsafe safety device can be connected across terminals P1 and P2.

Note: See section E for complete installation instructions for the Micanan N-1 or N-4 photocells or the FRABA photocells.

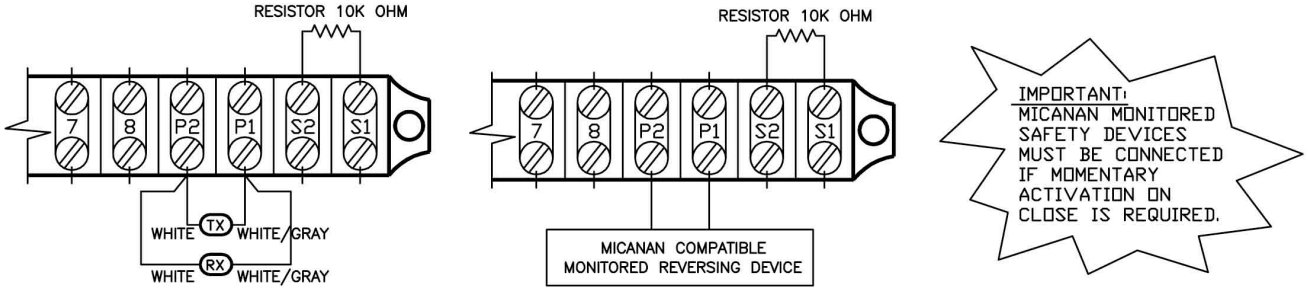

Secondary non-monitored safety device(s):

A standard 2-wire safety edge, non-monitored reflective or thru-beam photo eye or any other non-monitored reversing devices with a N.O dry contact can be connected to terminals S1 and S2.

Note: More than one secondary non-monitored safety device can be connected to terminals S1 and S2.

Important: Do not remove resistor that is factory installed across terminals S1 and S2 unless installing a 4-wire electric edge.

4-wire electric edge Connection

A standard 4-wire electric edge can be connected across S1 and S2 terminals as a secondary safety device. Remove the factory installed resistor across terminals S1 and S2 and install resistor across the black and white pair of wires from the electric edge and connect the remaining black and white wire to the S1 and S2 terminals.

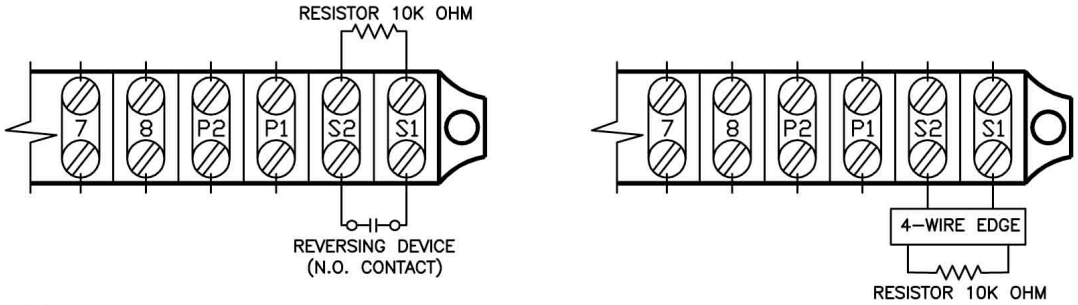

7) Select Mode of Operation:

C2 *mode of operation (momentary on open, constant pressure on close):*

The operator is wired at the factory for momentary on open and constant pressure on close. For single phase limited duty operators, the purple wire is left unconnected. For 3-phase (1/2HP 380V 50Hz) operators, white wire is connected to terminal T6.

B2 *mode of operation (momentary on open, momentary on close):*

If momentary on close is required: For single phase limited duty operators, connect purple wire to terminal #5. For 3-phase (1/2HP 380V 50Hz) operators, remove the white wire from terminal T6 and place it on terminal T3.

The operator functions in B2 mode only when the primary monitored safety device is connected and functioning properly. If it is not connected, operator will go into fault mode and door can only be closed by constant pressure on close and if constant pressure on close is removed before door reaches full close position, door reverses to full open.

SECTION C: *PRO-LJ(E), PRO-LH(E) Limited Duty Smart 5.0 logic board (UL325 (2010) compliant)*

Note: The operator is shipped from the factory in the C2 mode (constant pressure close and momentary open). The operator should remain in this mode until all connections and limit switch adjustments are completed.

POWER WIRING INSTRUCTIONS:
Connect primary power supply directly to the separate power terminal strip supplied using any of the 1-1/8" (2.85 cm) diameter holes provided on control box. Do not connect power supply directly to the circuit board.

Connect single-phase power supply to terminals L/L1 and N/L2 on three-pole power terminal strip (110V or 220V 1-phase).

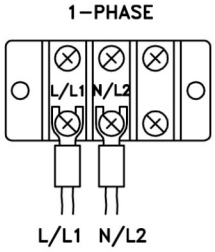

ON BOARD O/C/S PBS INSTRUCTIONS:
On-board Open, Close and Stop buttons are provided directly on the board for installation and troubleshooting purposes. In order to operate unit by on-board Open, Close, Stop buttons, the factory installed jumper (#1) between the COM and STOP terminals on the terminal strip must remain connected.

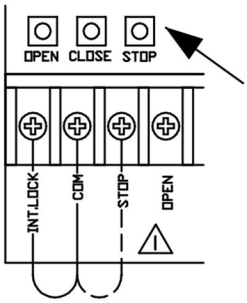

MOTOR DIRECTION VERIFICATION:
Make sure the mode of operation is selected to C2.
After electrical power connections are made, manually move door to mid-position. Using the on-board buttons press the "Open" button for several seconds and then press the "Stop" button. If door did not move in correct direction (or if limit cams not moving in correct direction towards the open limit switch) see below:

The operators leave the factory with correct motor and limit shaft direction according to standard door installations. However, for special fire door, through wall mounting or other special door applications, the motor direction and limit switch direction may need to be reversed. To reverse motor rotation, interchange red and yellow wires on the capacitor and interchange the wires on open and close limits. Disconnect the 2 wires from the advanced closed limit switch and re-connect to the auxiliary limit switch provided.

Note: Ensure that when the on-board open button is depressed and the door moves in the correct open direction that activation of the open limit switch stops the door.

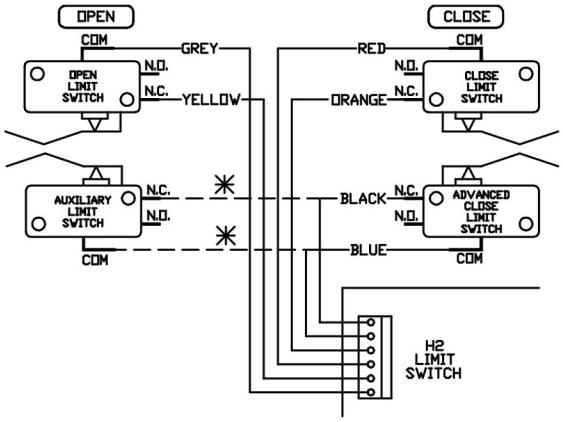

LIMIT SWITCH ADJUSTMENTS:

Once the motor rotation and limit cam direction have been verified, adjust the limit cam settings. Refer to operator installation manual for complete limit switch adjustment instructions.

CONNECTION OF EXTERNAL O/C/S PBS:

Connect O/C/S PBS as shown in diagram.

Note: Jumper #1 must be removed after the external O/C/S PBS has been installed.

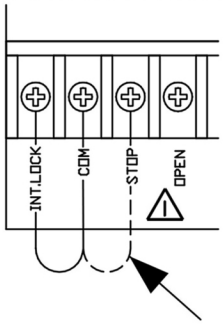

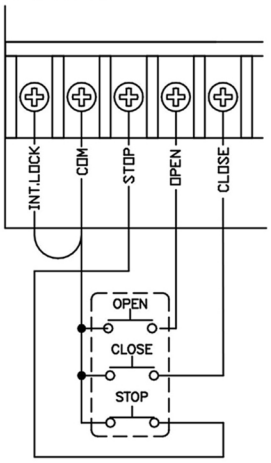

SINGLE PUSH-BUTTON STATION

FAILSAFE FEATURE

A safety device failsafe feature is built into the logic board. The logic board has provisions to connect one primary monitored safety device as well as 1 or more secondary non-monitored safety device(s).

Primary monitored safety device:

MICANAN monitored failsafe photo beams or MICANAN compatible monitored failsafe devices must be connected to terminals P1 and P2 as primary monitored safety device. Primary monitored safety device must be connected if momentary activation on close is required in B2, T and TS modes. If it is not connected in B2 and TS modes. If it is not connected in B2 or TS modes, door can only be closed by constant pressure on close and if constant pressure is removed before door reaches full close position, door reverses to full open.

Note: Only one monitored failsafe device can be connected to terminals P1 and P2.

MICANAN FAIL-SAFE PHOTO BEAM

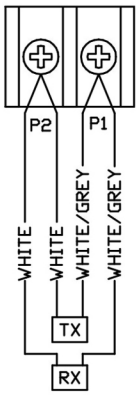

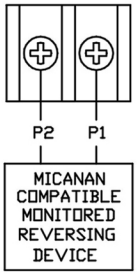

Secondary non-monitored safety device(s):

A standard 2-wire safety edge, non-monitored photo beams or any other non-monitored reversing devices with a N.O contact can be connected to terminals S1 and S2 as secondary non-monitored safety device.

Note: More than one secondary non-monitored safety device can be connected to terminals S1 and S2.

Important: Do not remove the resistor that is factory installed across terminals S1 and S2 unless installing a 4-wire electric edge.

4-wire electric edge:

A standard 4-wire electric edge can be connected across S1 and S2 terminals as a secondary safety device.

Remove the factory-installed resistor across terminals S1 and S2 when using a 4-wire electric edge.

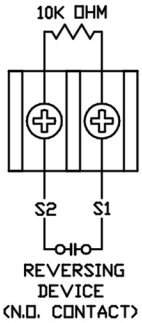

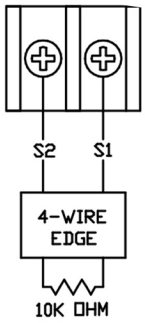

CONNECTION OF EXTERNAL SINGLE-BUTTON DEVICE

Connect an external single-button as shown in diagram. Please refer to ‘’Modes of operation’’ for the functionality of single-button.

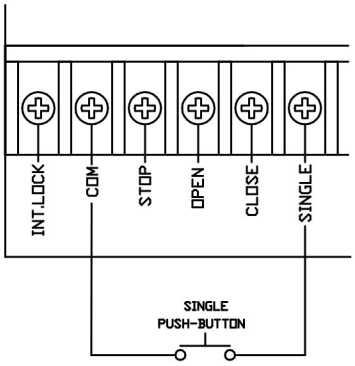

GENERAL INFORMATION: Auxiliary device may be installed to edge terminals, open or close button terminals, and single button terminals providing that they are of the NORMALLY OPEN DRY CONTACT TYPE.

MODES OF OPERATION

All operators leave the factory with the jumper on C2. Please read all modes of operation and determine which operational mode is desired.

B2: (Momentary on open and close)
• Open Button: Momentary activation opens the door. When door is closing, momentary activation reverses the door (OPEN OVERRIDE).
• Close button: Momentary on close.
• Stop button: Momentary activation stops the door.
• Single button device and external radio control: Open/Close/Reverse.
• Safety Devices: When door is closing, momentary activation reverses the door.
• Timer to close: N/A

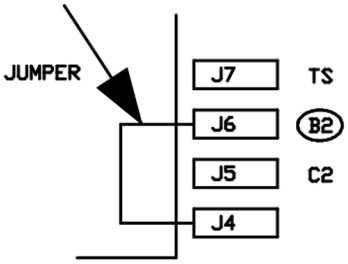

C2 (Momentary open, constant pressure close)
• Open Button: Momentary activation opens the door. When door is closing, momentary activation reverses the door (OPEN OVERRIDE).
• Close button: Constant pressure on close. Door will stop when button is released.
• Stop button: Momentary activation stops the door.
• Single button device: Open/Constant pressure on close/stop.
• External radio receiver: Momentary activation opens the door (Cannot close the door).
• Safety Devices: When door is closing, momentary activation reverses the door.
• Timer to close: N/A

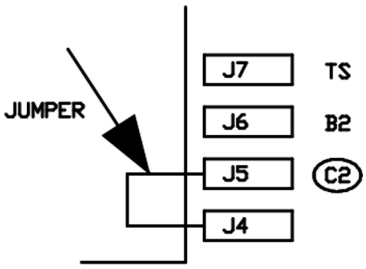

TS: (Momentary on open and close, timer to close secure, STOP BUTTON DISABLES TIMER)
• Open Button: Momentary activation opens the door. When door is closing, momentary activation reverses the door. Momentary contact at full-open position re-activates the timer if timer has been disabled previously by stop button.
• Close button: Momentary on close.
• Stop button: If door is opening or closing, momentary activation stops the door. Momentary activation while timer is counting at full open de-activates the timer.
• Single button and external radio: Open/Reverse/Refresh timer.
• Safety Devices: When door is closing, momentary activation reverses the door.
Momentary activation when door is at full open refreshes the timer to close.
• Timer to close: Closes the door from full open. Momentary activation of stop button will de-activate the timer. Timer resumes its normal operation upon momentary activation of open push button or once the close cycle is completed.

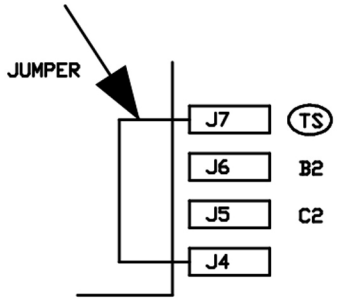

TIMER TO CLOSE SETUP:

Timer to close is enabled only in TS mode of operation. There are 3LED lights on the board to indicate the timer to close value. Default setting of timer to close is 3 seconds. To modify this value, press “TIMER PROGRAM” button until desired value is reached. The LED status changes when the “TIMER PROGRAM” button is pressed each time. The following chart correlates the LED lights status to the timer to close value.

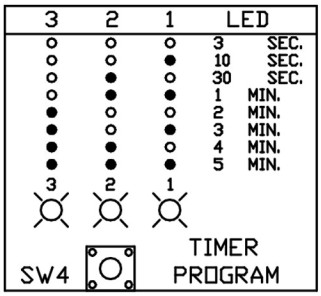

STATUS LED:

LED	STATUS	CAUSE
FAULT	ON	-SAFETY DEVICES NOT CONNECTED OR FUNCTIONNING PROPERLY. -SAFETY DEVICES ARE ACTIVATED.
POWER	ON	-24VAC POWER TO LOGIC BOARD IS ON.

SECTION D: For all operator control types

LIMIT SWITCH ADJUSTMENT

Adjustment of door travel is done by moving the limit cams on the threaded shaft. The position of the 4 limit switches are factory adjusted and should not be altered. The limit switches are:

- **"Open" limit switch**: End of door travel in the fully open position
- **"Closed" limit switch**: End of door travel in the fully closed position
- **"Advanced Open" limit switch**: Used for open/close devices or timer to close features.
- **"Advanced Closed" Limit switch**: Used to prevent reversing device from reversing door when door is almost fully closed.

⚠ WARNING

TO REDUCE THE RISK OF INJURY OR DEATH:

DO NOT ATTEMPT TO MAKE LIMIT SWITCH ADJUSTMENTS UNLESS POWER HAS BEEN ELECTRICALLY DISCONNECTED

To adjust door travel:

1. **Open cycle**: Depress cam plate and spin "Open" limit cam away from "Open" limit switch to increase door travel or spin "Open" limit cam towards the "Open" limit switch to decrease door travel. After each adjustment ensure that cam plate fully engages in slots of both limit nuts.
2. Adjust "Open" limit cam so that door stops at the desired fully open position.

3. **Close cycle**: Depress cam plate and spin "Close" limit cam away from "Close" limit switch to increase door travel or spin "Close" limit cam towards the "Close" limit switch to decrease door travel. After each adjustment ensure that cam plate fully engages in slots of both limit nuts.
4. Adjust "Close" limit cam so that door stops at the desired fully closed position.

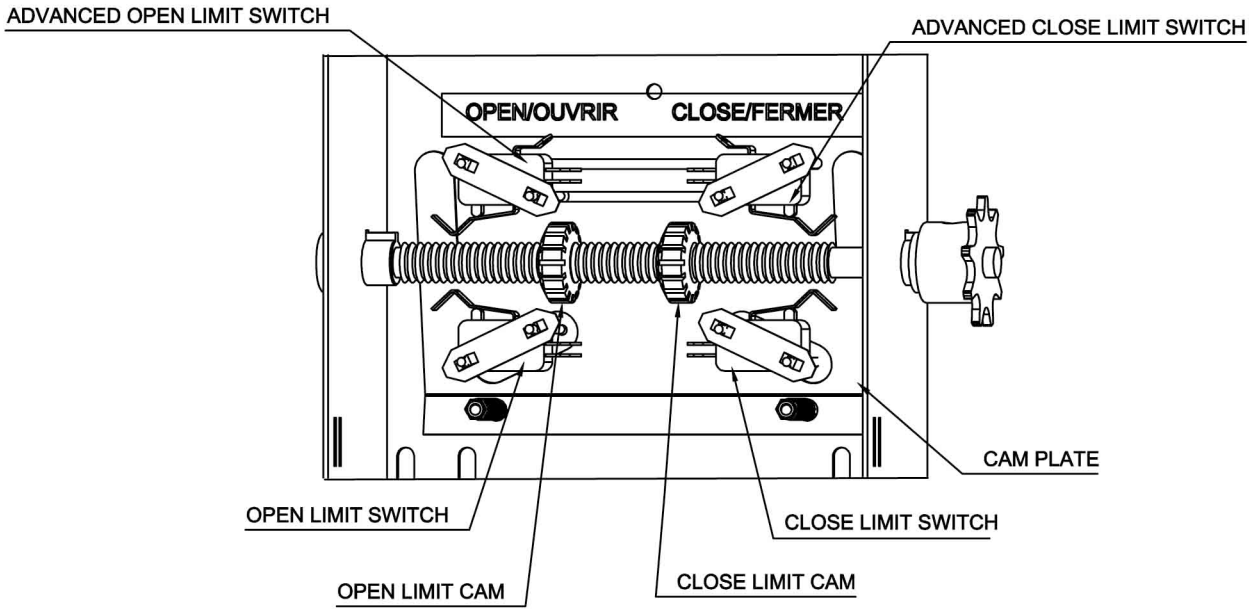

SECTION E: For Operators with Interface Modules or Logic boards

INSTALLATION OF MICANAN N-1 OR N-4 PHOTOCELLS

Installation Safety Precautions

WARNING: MICANAN MK00649 NEMA-1, MK00650 NEMA-4 and FRABA MK00697 NEMA 4/4X infrared photo systems are for use only with MICANAN logic board operators or relay logic operators equipped with the Micanan failsafe interface module. Use of this device on other than recommended operators can lead to severe or fatal injury. Follow these instructions carefully.

IMPORTANT: *For momentary activation on close, the MICANAN photobeams (or a Micanan 2-wire monitored edge), must be installed as part of the operator system.* If a Micanan 2-wire monitored edge or the MICANAN infrared photobeam system is not installed (or not operating correctly), the operator will only operate in fault mode (constant pressure to close).

READ and FOLLOW all installation instructions.

1. Before installing the photo beam, read the door or gate operator's instruction manual fully, so you are aware of all of the unit's functions and features.
2. Wear protective gloves and eye protection when using tools.
3. Before installing photo beam, disconnect all power to door operator to prevent unintended operation and have the door full open or close.
4. Do not reconnect power to the door or gate operator until instructed to do so.
5. Only install photobeams on a properly functioning door or gate operator.
6. Installation and wiring must comply with local building and electrical codes. This device is not intended and must not be installed in an explosive environment.

WARNING: Keep fingers and other body parts away from all moving parts of the door and gate operator system while the system is being operated.

WARNING: To prevent unintended operation, disconnect power to the door or gate operator prior to installing the photobeam system.

MICANAN N-1 PHOTOCELL (MK00649)

Note: The MK00649 photocell system has a maximum range of 24 ft. Sun visor protector optional.

Installation

Note: Photo beams should be mounted as close to the door track inside the door to offer maximum entrapment protection.

Wall installation:

1. Select a location on the wall no more than 6 inches from the floor to install wall mounting brackets on the left and right side of the door. Both brackets must be mounted at the same height for proper alignment.
2. Drill holes in the wall and attach brackets to the wall using screws and nails provided as shown in Fig. 1.

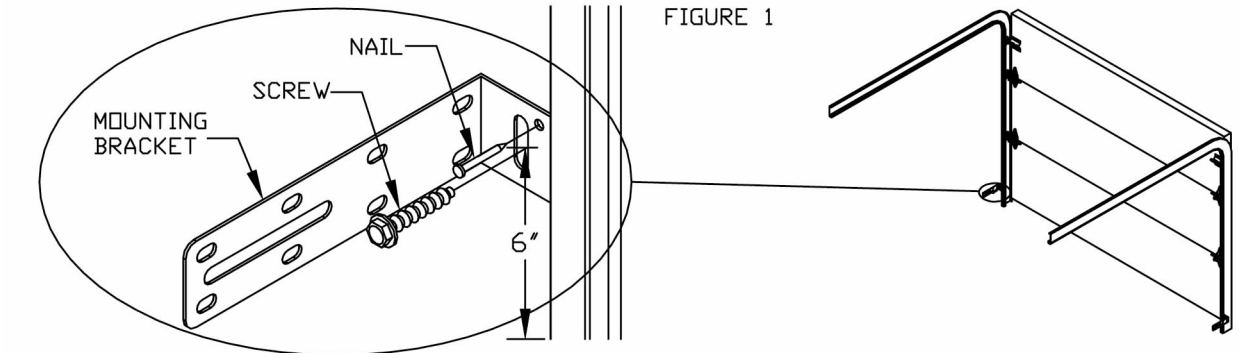

3- Using the wing nuts, attach the receiver and transmitter of the photo system to the mounting brackets (with arrow pointing up). Note that the receiver and transmitter can be installed on the left side or right side of the door.
4- Adjust the position of the transmitter and receiver on the slot of the brackets. Secure the receiver and transmitter to the mounting brackets as shown in figure 2.

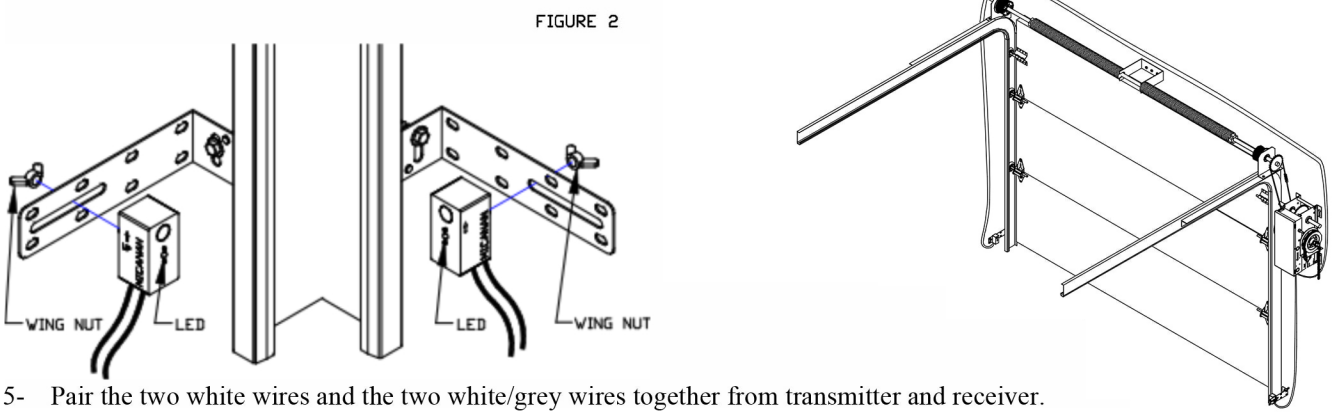

5- Pair the two white wires and the two white/grey wires together from transmitter and receiver.
6- Connect these paired wires to the P1 and P2 terminals on the logic board (or interface module if applicable) as shown in Figure 3.

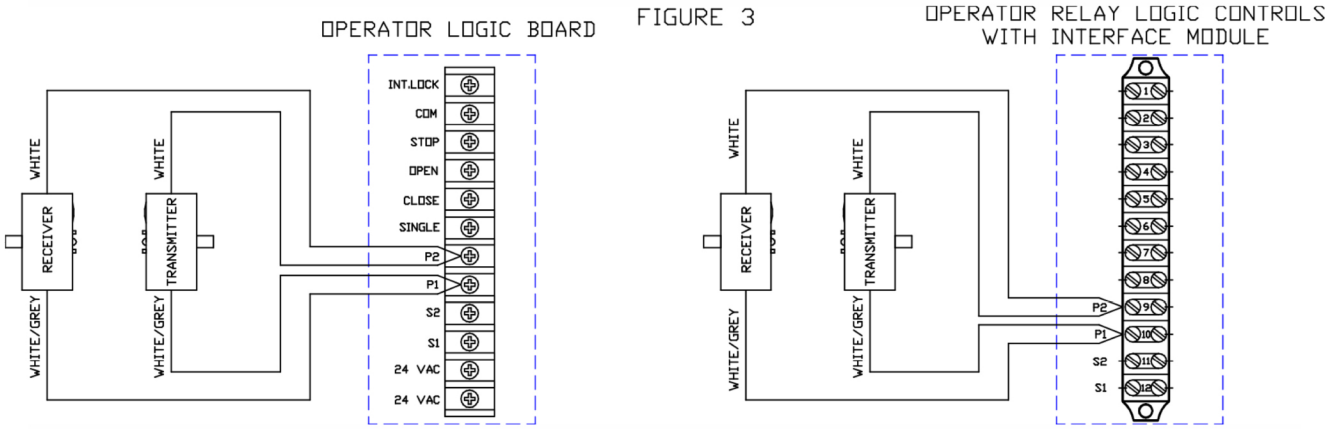

MICANAN N-4 PHOTOCELL (MK00650)

Note: The MK00650 photocell system has a maximum range of 24 ft. Sun visor protector optional.

Installation

Note: Photo beams should be mounted as close to the door track inside the door to offer maximum entrapment protection.

Wall installation:

1. Select a location on the wall no more than 6 inches from the floor to install wall mounting brackets on the left and right side of the door. Both brackets must be mounted at the same height for proper alignment.
2. Drill holes in the wall and attach brackets to the wall using screws and nails provided as shown in Fig. 1.

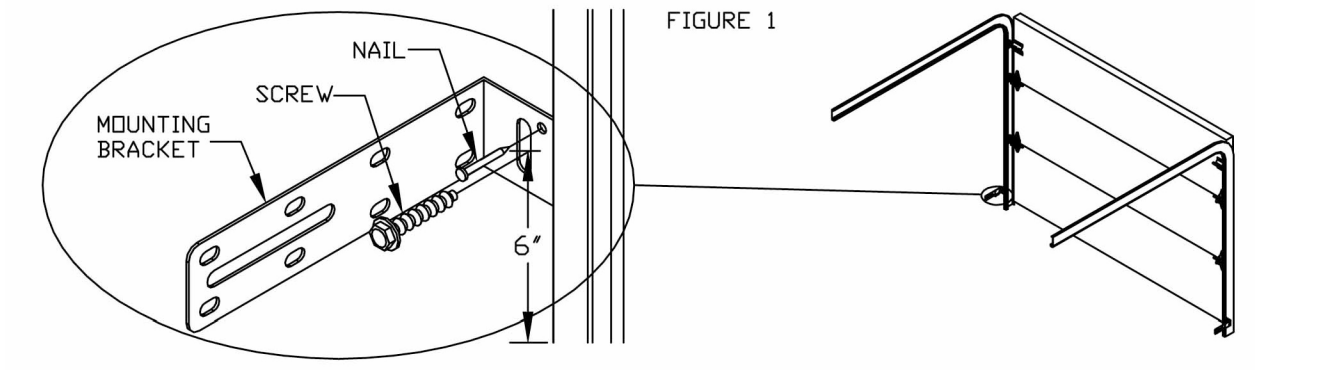

3. Using the 8 phillips head screws, attach the receiver and the transmitter to the two mounting plates (Fig 2A).
4. Using the wing nuts, attach the receiver and the transmitter of the photo system to the mounting L-brackets (with arrow pointing up) as shown in Fig 2B. Note that the receiver and transmitter can be installed on the left or right side of the door. For applications requiring the photobeams to be further away from the wall, use the extension brackets provided as shown in Fig 2C

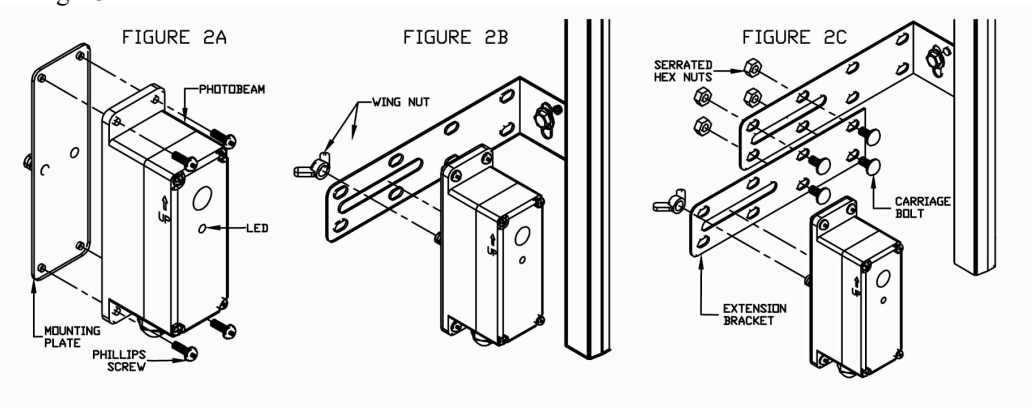

5. Adjust the position of the transmitter and receiver on the slot of the brackets and tightly secure the wing nuts
6. Loosen the 4 fastening screws and remove the cover from the photobeam transmitter and receiver housings and insert electrical wire through the strain relief (Fig 3A). Pair the two white/grey wires together from transmitter and receiver
7. Connect these paired wires to the P1 and P2 terminals on the logic board (or interface module if applicable) as shown in Fig 3B. Use minimum 18 gauge wires and secure the wires to wall or ceiling.

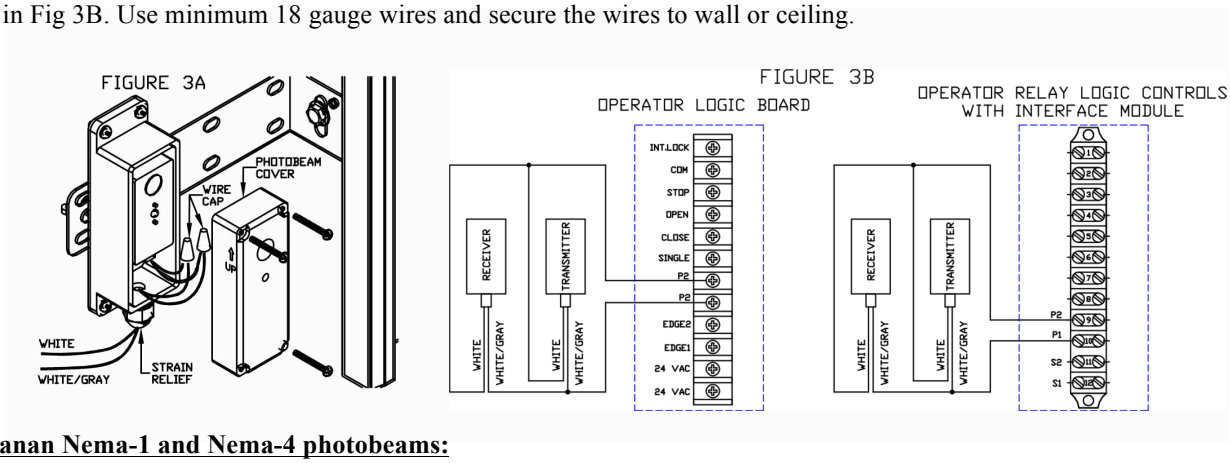

<u>For Micanan Nema-1 and Nema-4 photobeams:</u>

Aligning the photo beams:

1. Turn the power on to the operator. If the transmitter and receiver are installed properly, the lights on both the transmitter (red L.E.D.) and receiver (green L.E.D.) will be ON.
2. If the photo beams are not aligned properly, the receiver light (green) is OFF. Adjust the position of the transmitter and/or the receiver on the slot of the mounting bracket until the light on the receiver is ON and then secure to the bracket.

Photo system operation:

MICANAN photo beams must be connected for the door to close in momentary mode (unless a MICANAN monitored 2-wire edge is connected). When the photo system is properly installed and aligned, the infrared beam will detect any obstruction in the path of the beam. Upon detecting an obstruction, closing door will stop and reverse to full open. The MICANAN operator control circuit continuously monitors the correct operation of the photo system. If the photo beams are not connected or not functioning properly, the operator will go into fail-safe mode and closing door will reverse to full open. In fail-safe mode door can only be closed by constant pressure on close.

<u>To test the photo system:</u>

1. Open the door to full open position.
2. Close the door.
3. When door is closing, obstruct the beam. The door should stop and reverse.

FRABA N-4/4X THRU-BEAM PHOTOCELL (MK00697)

Note: The MK00697 photocell system has a maximum range of 45 ft. Sun visor protector optional.

1. Select a location on the wall no more than 6 inches from the floor to install wall mounting brackets on the left and right side of the door. Both brackets must be mounted at the same height for proper alignment.
2. Drill holes in the wall and attach brackets to the wall using screws provided as shown in Fig. 1.

Fig.1

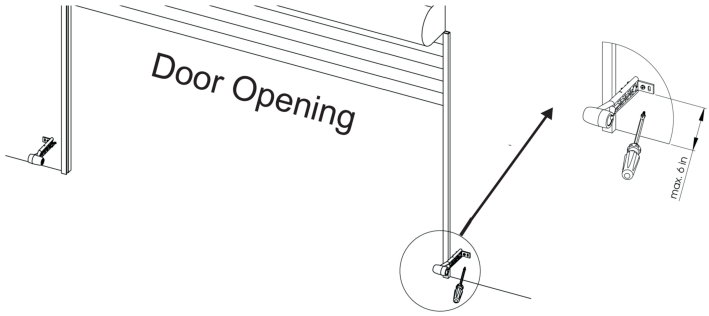

3. Plug sensors into flexible adapters as shown in Fig. 2. Please note that the 2 brackets are not identical. The receiver (Rx) must be installed into the receiver adapter and the transmitter (Tx) must be installed into the transmitter adapter (Fig. 3).

Fig.2

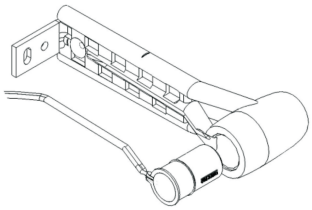

Fig.3

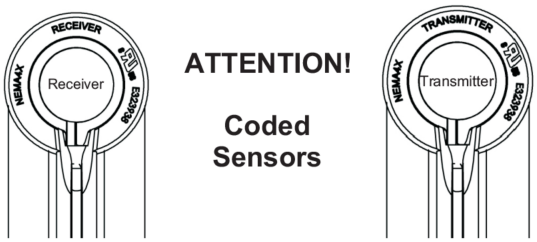

4. Pair the two black and the two black with white tracer wires together from transmitter and receiver. Connect these paired wires to the P1 and P2 terminals on the logic board (or interface module if applicable) as shown in Fig 4. Use minimum 18 gauge wires and secure the wires to wall or ceiling.

FIGURE 4

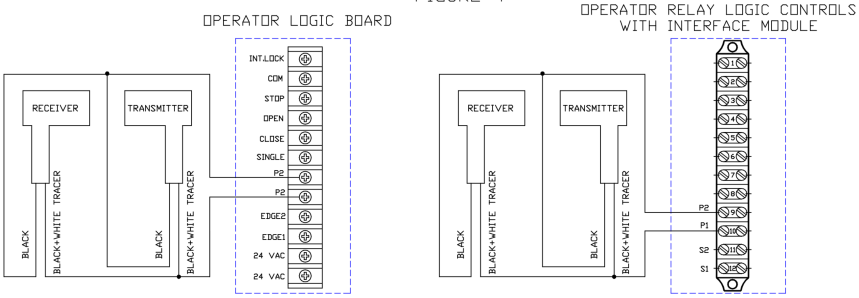

5. Turn the power on to the operator. Align transmitter and receiver by adjusting angle and height of the fixture (Fig. 5A and 5B).

Fig. 5A

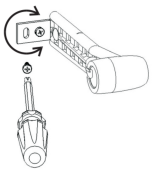

Angle Adjustment

Fig. 5B

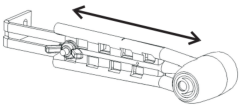

Height adjustment
(Loosen wing nut first)

6. Utilize LEDs on photocells for alignment and trouble shooting. Make sure to tighten screws and wing nuts after photocells are aligned.
   - Red LED (ON), Green LED (ON): Normal operation
   - Red LED (OFF), Green LED (OFF): No power. Verify wiring
   - Red LED (Blinking twice), Green LED (ON): Bad Alignment, or Obstructed Beam, or Rx defective
   - Red LED (Blinking twice), Green LED (OFF): Check power and wiring to Rx, or Rx defective
   - Red LED (Blinking three times), Green LED (ON): Rx receiving sunlight (or interference). Install visor or interchange position of transmitter and receiver to reduce sunlight affecting receiver.

To test the photo system: Open the door to full open position. Close the door. When door is closing, obstruct the beam. The door should stop and reverse.

CLUTCH ADJUSTMENT

1. Remove cotter pin tapped to pulley.
2. Rotate clutch nut counterclockwise (loosen) until there is insufficient tension to permit clutch to drive door.
3. Gradually tighten clutch nut until the tension on belleville washers is sufficient to permit clutch to drive door smoothly but will allow clutch to slip if door is obstructed. It should be possible to stop moving door by hand if clutch is properly adjusted.
4. Lock clutch nut in place by inserting cotter pin into one of the two adjustment holes provided.

Caution: Do not over-tighten the clutch as this will cause damage to the washers and create adjustment problems.

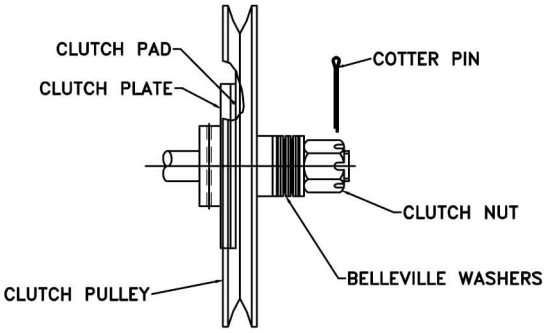

BRAKE ADJUSTMENT

The brake adjustment is factory set and should only require minor adjustment after extensive use.

Verify brake adjustment by manually holding in solenoid plunger. When brake is properly adjusted, the brake shoe pads should make complete contact with brake drum with sufficient brake spring tension to stop and maintain door when solenoid is de-energized. When solenoid is energized, brake shoes should release from drum with sufficient clearance to avoid contact between shoes and drum.

To adjust brake tension, tighten (to increase) or loosen (to decrease) nylon lock nut on brake spring bolt. Observe solenoid during electrical testing of brake. Brake spring tension must be adjusted so that solenoid should pull and release smoothly and quietly. Too much or too little tension on brake spring may cause solenoid to burn out.

To adjust individual brake shoes, loosen nut on brake shoe adjustment bolt and adjust bolt. When properly adjusted, there should be a small clearance between adjustment bolt and solenoid bracket when solenoid is de-energized. When solenoid is energized, brake shoes should move away from drum with sufficient clearance to avoid friction between brake shoe pad and drum. After adjustments are made be sure to tighten nuts on brake shoe adjustment bolts.

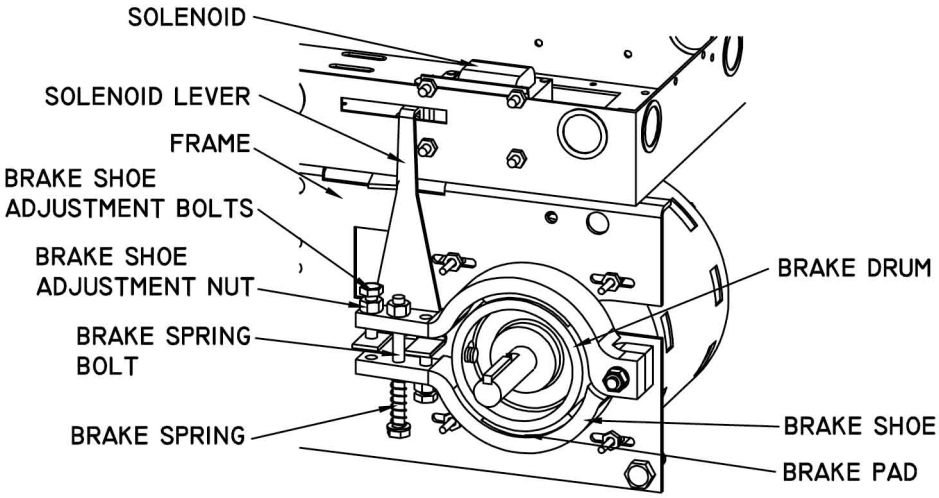

EMERGENCY MANUAL OPERATION

- The PRO-LJ and PRO-LH operators are equipped with an emergency disconnect device with interlocked power cut-out switch to manually operate door in case of emergency. This feature should not be used to manually operate a malfunctioning door.

⚠ WARNING

TO REDUCE THE RISK OF INJURY OR DEATH:

DO NOT ATTEMPT TO USE EMERGENCY DISCONNECT SYSTEM WHILE OPERATOR IS RUNNING.

POWER TO THE OPERATOR SHOULD BE TURNED OFF PRIOR TO OPERATING DOOR MANUALLY.

1. **If operator is supplied with standard chain keeper**: Pull the disconnect chain through the hole of keyhole and lock in place by inserting chain in slot of keyhole.

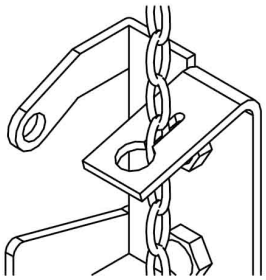

2. **If operator is supplied with optional floor level disconnect lever**: Pull disconnect lever downwards and lock in place by bending lever around bracket lip as shown.

3. For PRO-LJ operators: Move door manually. To return to electrical operation release disconnect chain and allow to return to original position.

4. For PRO-LH operators: Operate door by pulling on hand chain. To return to electrical operation release disconnect chain and allow to return to original position. Lock hand chain in place (to Chain Keeper or Floor Level Disconnect) when not in use.

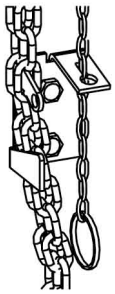

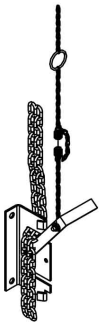

OPERATOR MAINTENANCE

⚠ WARNING

TO REDUCE THE RISK OF INJURY OR DEATH:

DO NOT ATTEMPT TO SERVICE THE OPERATOR UNLESS POWER SUPPLY HAS BEEN DISCONNECTED

- Inspect manual function of the door every 3-months. Make sure that door runs smoothly. If door does not manually open or close freely, have a qualified service person make repairs. Do not attempt to electrically operate a malfunctioning door.

- Every 3 months:

  1. Verify that door area is kept clean. Remove any obstructions that would prevent proper door operation.
  2. Check for any excessive slack in chains. If chain adjustment is required verify and adjust limit switches, if necessary.
  3. Verify and adjust clutch and brake (Do not lubricate).
  4. Lubricate chains, bearings and limit shaft.
  5. Verify that motor, solenoid and operator runs smoothly and quietly.

- Every 6 months:

  1. Verify tightness of all fasteners and set screws.
  2. Verify that operator is properly secured.
  3. Inspect manual disconnect.
  4. Verify tension and condition of V-belt

- Every 12 months:

  1. Perform a complete service check.
  2. Verify that inside of control box is clean and that grounding wires, terminations and power terminations do not show signs of corrosion.
  3. Verify tightness of all terminal strip screws and electrical connections.
  4. Verify power supply, voltage of input terminals during operation.
  5. Verify that current consumption of operator corresponds to nameplate information

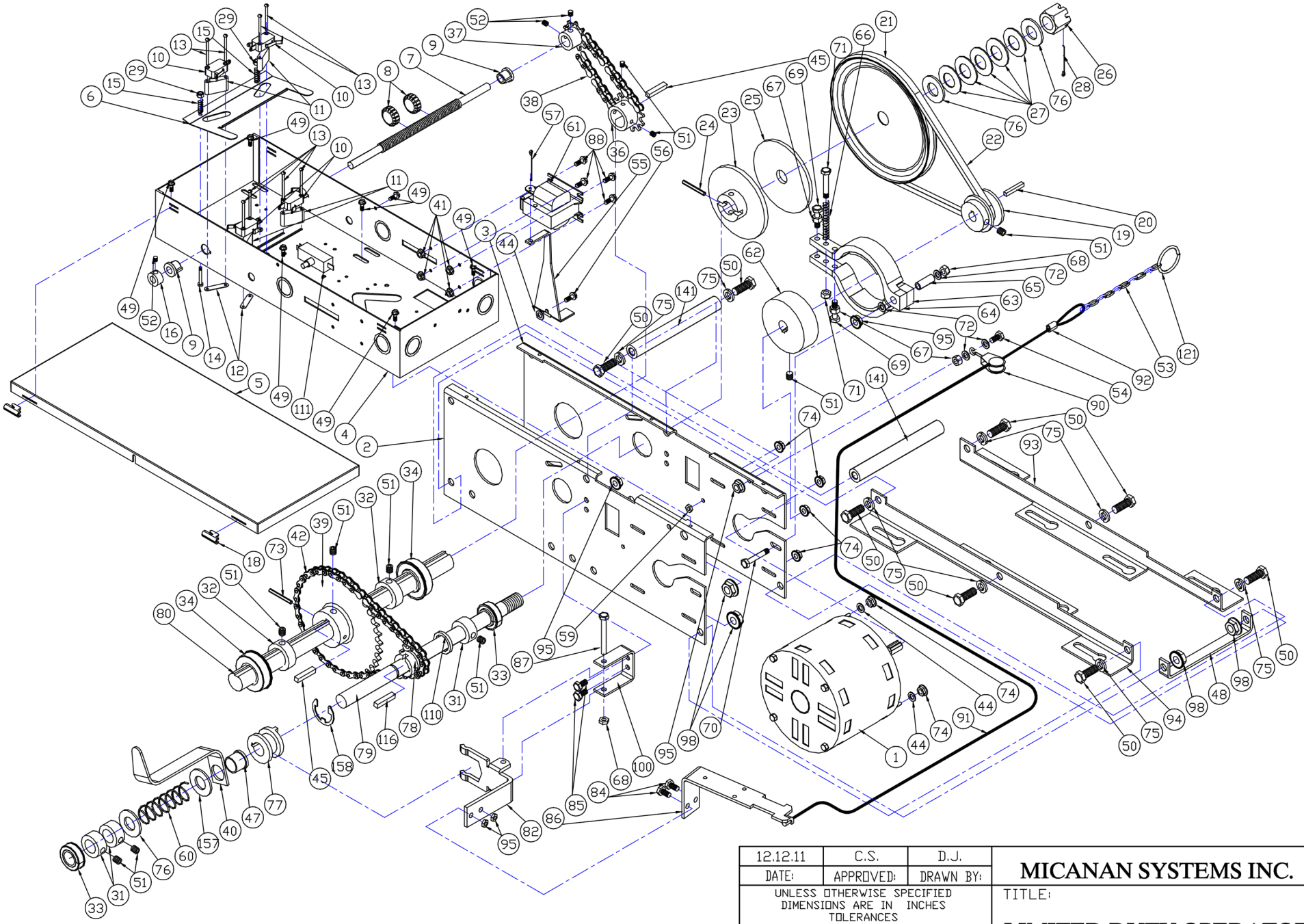

12.12.11	C.S.	D.J.	**MICANAN SYSTEMS INC.**
DATE:	APPROVED:	DRAWN BY:	
UNLESS OTHERWISE SPECIFIED DIMENSIONS ARE IN INCHES TOLERANCES .XX=±.01 ANGLES=±30′			TITLE: **LIMITED DUTY OPERATOR PRO-LJ**
			WEIGHT: lb / SIZE: B / PAGE: 1/1
REVISION:A			CAD FILE: 3D-PROLJ-XE / SCALE:

CODE	PART #	DESCRIPTION (PRO-LJ)	QTY
MB01010	1	MOTOR (Limited duty)	1
MM00073	2	FRAME (LEFT) MSI0098	1
MM00074	3	FRAME (RIGHT) MSI0099	1
MM00076	4	CONTROL BOX (Limited Duty) MSI0092	1
MM00077	5	CONTROL BOX COVER (Limited duty) MSI0093	1
MM00024	6	CAM PLATE MSI0013	1
ME00035	7	LIMIT SHAFT 3/8-1/2 x 8.436"	1
MG00030	8	LIMIT CAM 1/2-20 UNF	2
MH00001	9	BRONZE T-BUSHING 3/8" ID	2
MK00004	10	LIMIT SWITCH	4
MJ00006	11	LIMIT SWITCH DOUBLE SPACER 3/4" LONG	4
MG00003	12	DOUBLE NUT FOR LIM-SW.	4
MF00003	13	R.H. PHILLIPS MACHINE SCREW 4-40 UNCx1-1/2"	8
MF00004	14	R.H. PHILLIPS MACHINE SCREW 6-32 UNC x1"	2
MO00001	15	CAM PLATE COMPRESSION SPRING (.178IDx.032GX.55L)	2
MH00006	16	COLLAR 3/8" ID	1
MM00046	18	CONTROL BOX HINGE	2
MI00018	19	MOTOR PULLEY 4L 5/8 ID	1
ME00018	20	KEYWAY 3/16 SQ. x 1-1/4" LONG	1
MI00017	21	PULLEY 7" OD c/w BUSHING 3/4" ID	1
MI00035	22	V-BELT A-27	1
MJ00004	23	CLUTCH PLATE ALUMINUM 3/4" ID	1
MQ00007	24	SPRING PIN 1/4" x 2" LONG	1
MJ00005	25	CLUTCH PAD 3/4" ID	1
MG00014	26	SLOTTED HEX NUT 3/4-24UNF	1
MG00004	27	BELLEVILLE WASHER 13/16 IDx1-3/16X1/8	6
MQ00002	28	COTTER PIN 1/8 x 2.5" LONG	1
MG00007	29	HEX NYLON LOCK NUT 6-32UNC	2
MH00008	31	COLLAR 3/4" ID	3
MH00007	32	COLLAR 1" ID	2
MH00013	33	FLANGE BEARING 3/4" IDx1-3/8 OD	2
MH00009	34	FLANGE BEARING 1" IDx2"OD	2
MD00004	36	SPROCKET 410B12 X 1"	1
MD00111	37	SPROCKET 410B9 X 3/8"	1
MD00128	38	#410 ROLLER CHAIN 27 PITCH C/W CONNECTING LINK	1
MD00003	39	SPROCKET 41B36 x 1"	1
MM00025	40	PRO-J/LJ CUTOUT ACTIVATION BRACKET MSI0048	1
MG00036	41	RIBBED HEX NUT 8-32UNF	4
MD00009	42	#41 ROLLER CHAIN 45 PITCH DRIVE C/W LINK	1
MG00016	44	FLAT WASHER #10	5
ME00017	45	KEYWAY 1/4" SQ. x 1-1/4" LONG	2
MH00003	47	OILITE FLANGE BUSHING 3/4 ID X 7/8" OD	1
MM00128	48	LIMITTED DUTY FRAME SUPPORT U-BRACKET MSI0141	1
MF00046	49	H.H. SLOTTED SELF ROUNDING WASHER HEAD SCREW 10-32 UNF x 1/2"	7
MF00011	50	H.H. BOLT 3/8"-16UNC X 3/4" LONG	8
MQ00008	51	SET SCREW 5/16" -18	13
MQ00009	52	SET SCREW 1/4" - 20	3
MR00008	53	DISCONNECT SASH CHAIN	1
MF00008	54	HEX HEAD BOLT 1/4" - 20 X 1" LONG	1
MM00078	55	SOLENOID LEVER LIMITTED DUTY MSI0094	1
MF00005	56	R.H. PHILLIPS MACHINE SCREW 10-32 UNF x 5/8"	1
MQ00001	57	COTTER PIN 1/8 x 1.5"	1
MG00008	59	HEX NYLON NUT 10-32 UNF	1
MO00006	60	COMPRESSION SPRING (0.92" ID - 0.09G - 2.00"L)	1
MK00026	61	SOLENOID 120V	1
MJ00003	62	BRAKE DRUM	1
MJ00001	63	BRAKE SHOE LEFT	1
MJ00002	64	BRAKE SHOE RIGHT	1
MH00002	65	MILD STEEL BUSHING 9/32ID x 13/32OD x1-1/16	1
MO00002	66	BRAKE COMPRESSION SPRING (5/16"ID-.05G-2.50L)	1
MG00006	67	HEX NUT 1/4-20UNC	3
MG00009	68	HEX NYLON LOCK NUT 1/4-20UNC	3
MF00028	69	HEX HEAD BOLT 1/4-20UNC x 1-1/4" (Full thread)	2
MF00076	70	HEX HEAD BOLT 1/4-20UNC x 2" (full thread)	1
MF00044	71	HEX HEAD BOLT 1/4-20UNC x 4" (partial thread)	1
MG00017	72	1/4" FLAT WASHER	4
MQ00017	73	SPRING PIN 3/16" X 2" Long	1
MG00010	74	RIBBED HEX NUT 10-32UNF	8
MG00018	75	LOCK WASHER 3/8"	8
MG00019	76	FLAT WASHER 13/16" I.D.x1.5OD (3/4" SHAFT SIZE)	3
MD00027	77	PRO-J/LJ DISCONNECT COUPLING 3/4" ID	1
MD00026	78	41B10 X 3/4" C/W SLOT FOR DISCONNECT	1
ME00038	79	INPUT SHAFT PRO-LJ 3/4" x 10.875"	1
ME00007	80	DRIVE SHAFT JACKSHAFT 1" X 15"	1
MM00019	82	DISCONNECT ARM (PRO-J/LJ) MSI0049	1
MF00007	84	HEX HEAD BOLT 1/4" - 20UNC x 3/4"	2
MF00006	85	HEX HEAD BOLT 1/4" - 20UNC x 1/2"	2
MM00079	86	DISCONNECT LEVER LIMITTED DUTY MSI0095	1
MF00009	87	HEX HEAD BOLT 1/4" - 20UNC x 2-1/4" (Partial thread)	1
MF00045	88	H.H. SLOTTED SELF ROUNDING WASHER HEAD SCREW 8-32UNF x 3/8"	4
MU00001	90	SWIVEL PULLEY	1
MR00001	91	DISCONNECT CABLE 3/32 X 12" LONG	1
MQ00011	92	3/32" ALUMINUM OVAL SLEEVE	1
MM00130	93	FRAME FOOT LIMITTED DUTY(LEFT) MSI0140	1
MM00129	94	FRAME FOOT LIMITTED DUTY (RIGHT) MSI0139	1
MG00011	95	RIBBED HEX NUT 1/4" - 20 UNC	6
MG00013	98	RIBBED HEX NUT 3/8" - 16UNC	4
MM00023	100	SUPPORT U-BRACKET PRO-J/LJ MSI0050	1
MG00021	110	FLAT WASHER 7/8" ID X 1-1/8" OD	1
MK00005	111	CUTOUT SWITCH C/W NUT & WASHER	1
ME00019	116	KEYWAY 3/16" SQ. X 3/4" LONG	1
MU00002	121	KEYRING 1-1/4"	1
ME00050	141	FRAME SUPPORT SHAFT 3/4" X 6" LONG	2
MG00121	157	FLAT WASHER 15/16" ID x 1-3/4" OD x 1/8" TH.	1
MG00122	158	C-CLIP 5/8" (FOR 3/4" SHAFT)	1

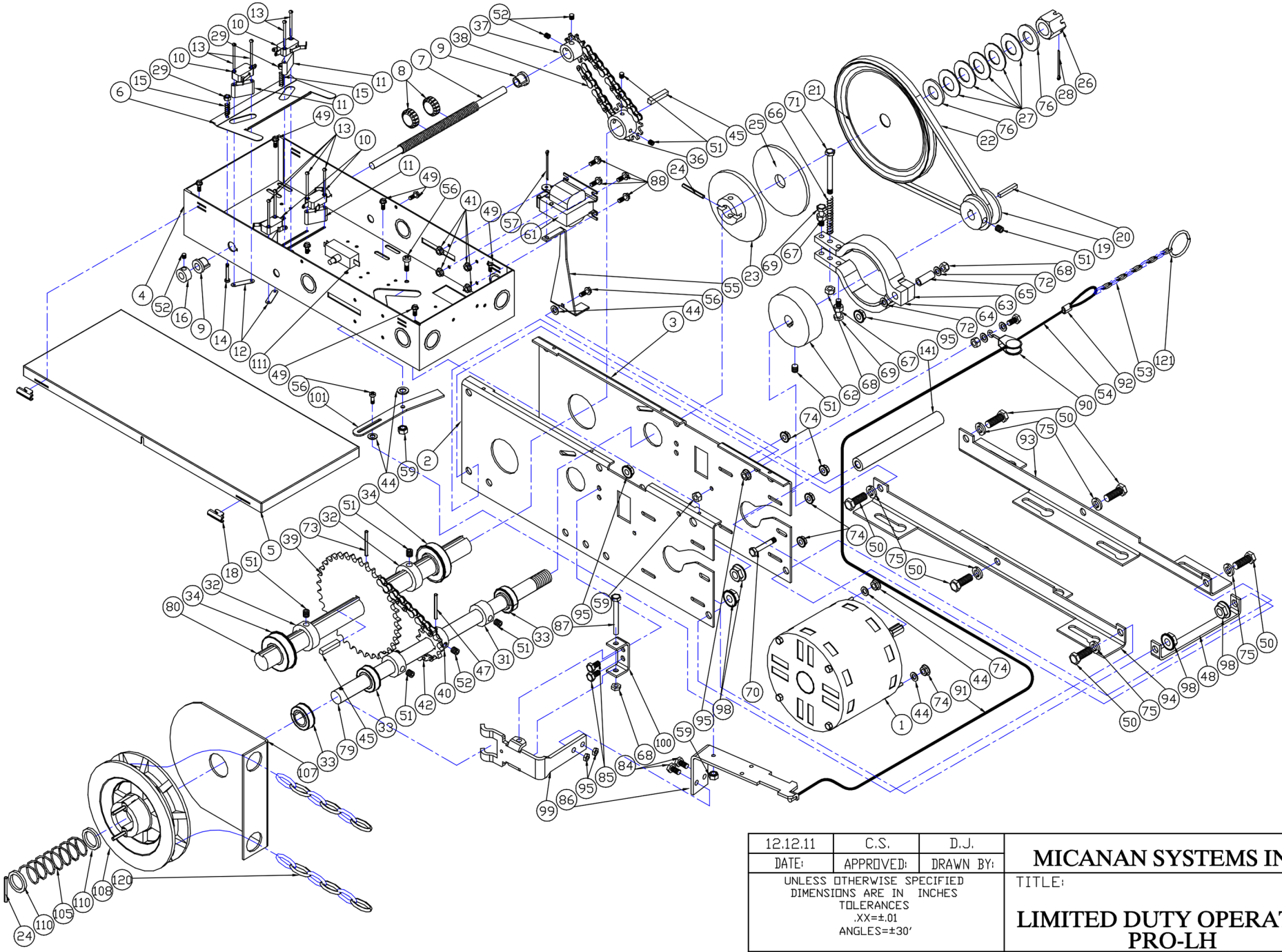

12.12.11	C.S.	D.J.	MICANAN SYSTEMS INC.
DATE:	APPROVED:	DRAWN BY:	
UNLESS OTHERWISE SPECIFIED DIMENSIONS ARE IN INCHES TOLERANCES .XX=±.01 ANGLES=±30′			TITLE: LIMITED DUTY OPERATOR PRO-LH
			WEIGHT: 1lb / SIZE: B / PAGE: 1/1
REVISION:A			CAD FILE: 3D-PROLH-XE / SCALE:

CODE	PART #	DESCRIPTION (PRO-LH)	QTY
MB01010	1	MOTOR (Limited duty)	1
MM00073	2	FRAME (LEFT) MSI0097	1
MM00074	3	FRAME (RIGHT) MSI0098	1
MM00076	4	CONTROL BOX (Limited Duty) MSI0092	1
MM00077	5	CONTROL BOX COVER (Limited duty) MSI0093	1
MM00024	6	CAM PLATE MSI0013	1
ME00035	7	LIMIT SHAFT 3/8-1/2 x 8.436"	1
MG00030	8	LIMIT CAM 1/2-20 UNF	2
MH00001	9	BRONZE T-BUSHING 3/8" ID	2
MK00004	10	LIMIT SWITCH	4
MJ00006	11	LIMIT SWITCH DOUBLE SPACER 3/4" LONG	4
MG00003	12	DOUBLE NUT FOR LIM-SW.	4
MF00003	13	R.H. PHILLIPS MACHINE SCREW 4-40 UNCx1-1/2"	8
MF00004	14	R.H. PHILLIPS MACHINE SCREW 6-32 UNC x1"	2
MO00001	15	CAM PLATE COMPRESSION SPRING (.178IDx.032GX.55L)	2
MH00006	16	COLLAR 3/8" ID	1
MM00046	18	CONTROL BOX HINGE	2
MI00018	19	MOTOR PULLEY 4L 5/8 ID	1
ME00018	20	KEYWAY 3/16 SQ. x 1-1/4" LONG	1
MI00017	21	PULLEY 7" OD c/w BUSHING 3/4" ID	1
MI00035	22	V-BELT A-27	1
MJ00004	23	CLUTCH PLATE ALUMINUM 3/4" ID	1
MQ00007	24	SPRING PIN 1/4" x 2" LONG	2
MJ00005	25	CLUTCH PAD 3/4" ID	1
MG00014	26	SLOTTED HEX NUT 3/4-24UNF	1
MG00004	27	BELLEVILLE WASHER 13/16 IDx1-3/16X1/8	6
MQ00002	28	COTTER PIN 1/8 x 2.5" LONG	1
MG00007	29	HEX NYLON LOCK NUT 6-32UNC	2
MH00008	31	COLLAR 3/4" ID	2
MH00007	32	COLLAR 1" ID	2
MH00013	33	FLANGE BEARING 3/4" IDx1-3/8 OD	3
MH00009	34	FLANGE BEARING 1" IDx2"OD	2
MD00004	36	SPROCKET 410B12 X 1"	1
MD00111	37	SPROCKET 410B9 X 3/8"	1
MD00128	38	#410 ROLLER CHAIN 27 PITCH C/W CONNECTING LINK	1
MD00003	39	SPROCKET 41B36 x 1"	1
MD00006	40	SPROCKET 41B10 x 3/4"	1
MG00036	41	RIBBED HEX NUT 8-32UNF	4
MD00009	42	#41 ROLLER CHAIN 45 PITCH DRIVE C/W LINK	1
MG00016	44	FLAT WASHER #10	7
ME00017	45	KEYWAY 1/4" SQ. X 1-1/4" LONG	2
MQ00016	47	SPRING PIN 3/16" x 1-1/4" LONG	1
MM00128	48	LIMITTED DUTY FRAME SUPPORT U-BRACKET MSI0141	1
MF00046	49	H.H. SLOTTED SELF ROUNDING WASHER HEAD SCREW 10-32 UNF x 1/2"	7
MF00011	50	H.H. BOLT 3/8"-16UNC X 3/4" LONG	6
MQ00008	51	SET SCREW 5/16" -18	12
MQ00009	52	SET SCREW 1/4" - 20	5
MR00008	53	DISCONNECT SASH CHAIN	1
MF00008	54	HEX HEAD BOLT 1/4" - 20 X 1" LONG	1
MM00078	55	SOLENOID LEVER LIMITTED DUTY MSI0094	1
MF00005	56	R.H. PHILLIPS MACHINE SCREW 10-32 UNF x 5/8"	3
MQ00001	57	COTTER PIN 1/8 x 1.5"	1
MG00008	59	HEX NYLON NUT 10-32 UNF	3
MK00026	61	SOLENOID 120V	1
MJ00003	62	BRAKE DRUM	1
MJ00001	63	BRAKE SHOE LEFT	1
MJ00002	64	BRAKE SHOE RIGHT	1
MH00002	65	MILD STEEL BUSHING 9/32ID x 13/32OD x1-1/16	1
MO00002	66	BRAKE COMPRESSION SPRING (5/16"ID-.05G-2.50L)	1
MG00006	67	HEX NUT 1/4-20UNC	3
MG00009	68	HEX NYLON LOCK NUT 1/4-20UNC	3
MF00028	69	HEX HEAD BOLT 1/4-20UNC x 1-1/4" (Full thread)	2
MF00076	70	HEX HEAD BOLT 1/4-20UNC x 2" (full thread)	1
MF00044	71	HEX HEAD BOLT 1/4-20UNC x 4" (partial thread)	1
MG00017	72	1/4" FLAT WASHER	4
MQ00017	73	SPRING PIN 3/16" X 2" Long	1
MG00010	74	RIBBED HEX NUT 10-32UNF	8
MG00018	75	LOCK WASHER 3/8"	6
MG00019	76	FLAT WASHER 13/16" I.D.x1.5OD (3/4" SHAFT SIZE)	2
ME00037	79	INPUT SHAFT PRO-LH 3/4" x 15.54"	1
ME00007	80	DRIVE SHAFT JACKSHAFT 1" X 15"	1
MF00007	84	HEX HEAD BOLT 1/4" - 20UNC x 3/4"	2
MF00006	85	HEX HEAD BOLT 1/4" - 20UNC x 1/2"	2
MM00079	86	DISCONNECT LEVER LIMITTED DUTY MSI0095	1
MF00009	87	HEX HEAD BOLT 1/4" - 20UNC x 2-1/4" (partial thread)	1
MF00045	88	H.H. SLOTTED SELF ROUNDING WASHER HEAD SCREW 8-32UNF x 3/8"	4
MU00001	90	SWIVEL PULLEY	1
MR00001	91	DISCONNECT CABLE 3/32 X 12" LONG	1
MQ00011	92	3/32" ALUMINUM OVAL SLEEVE	1
MM00130	93	FRAME FOOT LIMITTED DUTY(LEFT) MSI0140	1
MM00129	94	FRAME FOOT LIMITTED DUTY (RIGHT) MSI0139	1
MG00011	95	RIBBED HEX NUT 1/4" - 20 UNC	6
MG00013	98	RIBBED HEX NUT 3/8" - 16UNC	4
MM00018	99	DISCONNECT ARM (PRO-H/LH) MSI0011	1
MM00022	100	SUPPORT U-BRACKET PRO-H/LH MSI0015	1
MM00080	101	PIVOT BRACKET LIMITTED DUTY MSI0096	1
MM00013	107	CHAIN GUARD MSI0014	1
MI00003	108	POCKET WHEEL C/W 3/4" BUSHING & 2 1/4" SPRING PINS	1
MO00003	109	COMPRESSION SPRING (0.80ID x 0.092G x 1.80LONG)	1
MG00021	110	FLAT WASHER 7/8" ID x 1-1/8" OD	2
MK00005	111	CUTOUT SWITCH C/W NUT & WASHER	1
MR00006	120	HAND CHAIN	1
MU00002	121	KEYRING 1-1/4"	1
ME00050	141	FRAME SUPPORT SHAFT 3/4" X 6" LONG	1

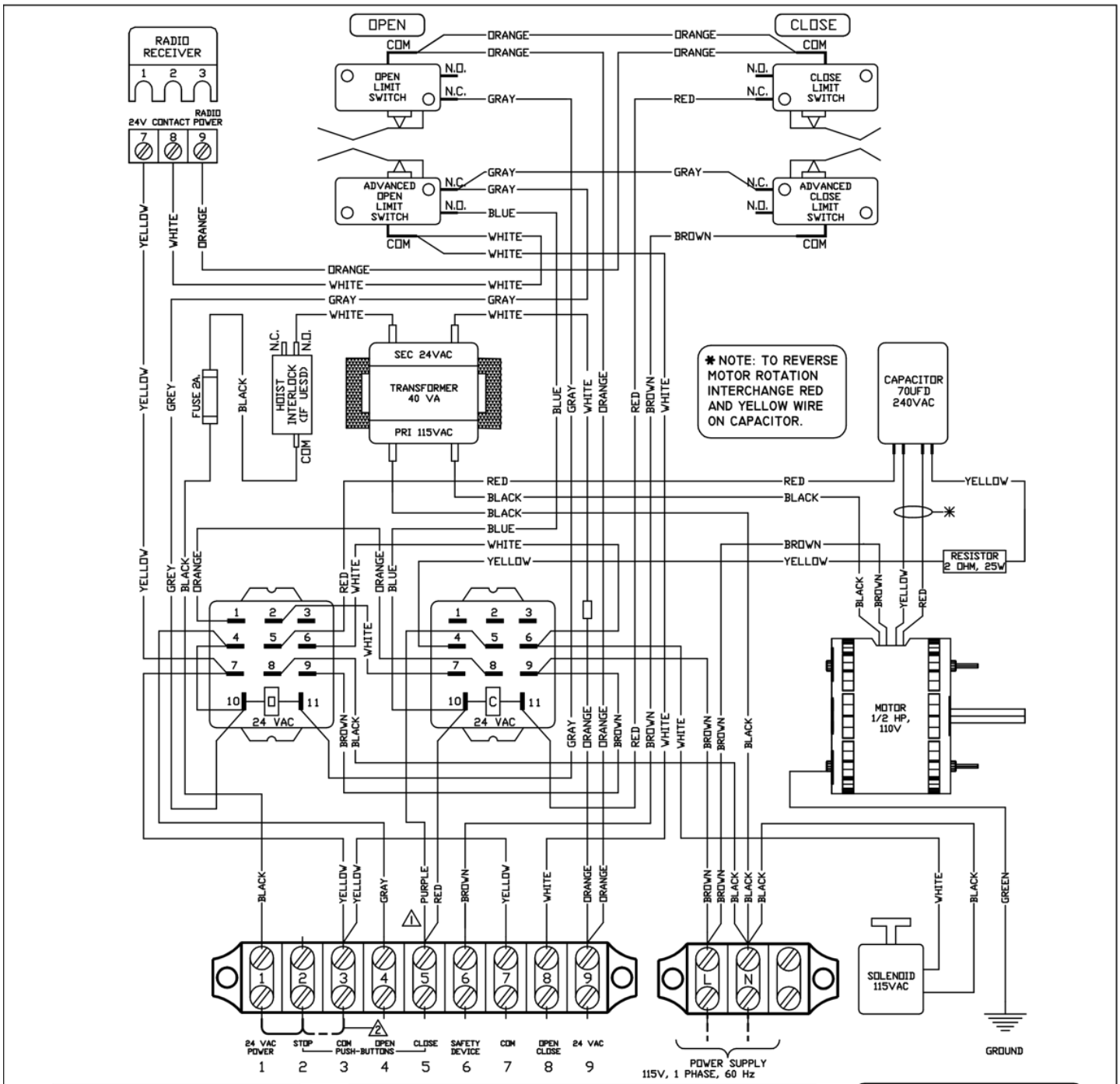

⚠ WARNING
MICANAN STRONGLY RECOMMENDS THE USE OF ENTRAPMENT PROTECTION SYSTEMS WHEN B2 (MOMENTARY CONTACT) WIRING IS USED.

CONTROL WIRING OPTION ON CLOSE: ⚠
THIS OPERATOR LEAVES THE FACTORY WITH A "C2" WIRING - MEANING THAT CONSTANT PRESSURE IS REQUIRED TO CLOSE THE DOOR.
IF MOMENTARY OPERATION ON CLOSE - "B2" WIRING - IS DESIRED, THEN RE-INSTALL THE PURPLE WIRE ON TO TERMINAL #5.

⚠ IF STOP BUTTON NOT USED, ADD JUMPER BETWEEN 2 & 3.

NOTE: MINIMUM 18 AWG WIRE MUST BE USED FOR FIELD CONNECTIONS.

PRO-LJ/LH/LTB/LHAB,1/2HP,110V,1Ø
MSLHR-WW
REV. G | DATE: 08.08.09
TECH. HELP LINE:
CANADA: 1-(877) 888-1116
USA: 1-(888) 816-8584

MICANAN
Commercial Door Opening Devices

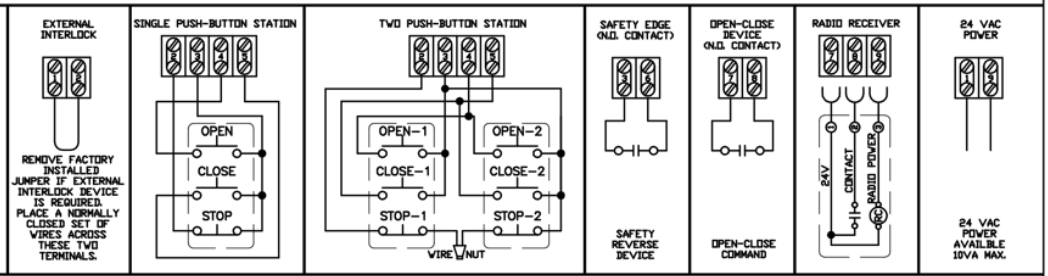

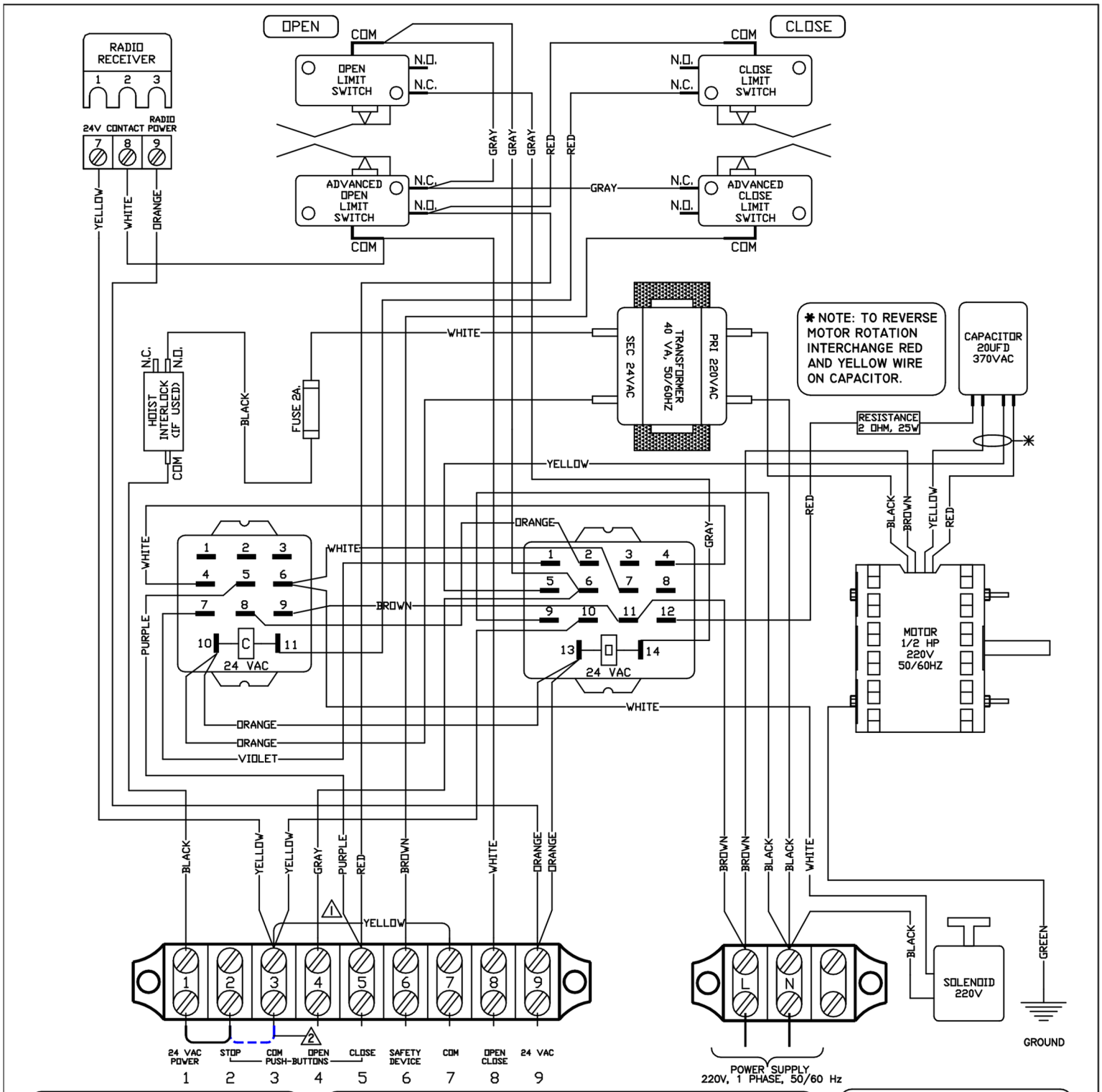

⚠1 WARNING
MICANAN STRONGLY RECOMMENDS THE USE OF ENTRAPMENT PROTECTION SYSTEMS WHEN B2 (MOMENTARY CONTACT) WIRING IS USED.

CONTROL WIRING OPTION ON CLOSE: ⚠1
THIS OPERATOR LEAVES THE FACTORY WITH A "C2" WIRING - MEANING THAT CONSTANT PRESSURE IS REQUIRED TO CLOSE THE DOOR.
IF MOMENTARY OPERATION ON CLOSE - "B2" WIRING - IS DESIRED, THEN RE-INSTALL THE PURPLE WIRE ON TO TERMINAL #5.

⚠2 IF STOP BUTTON NOT USED, ADD JUMPER BETWEEN 2 & 3.

NOTE: MINIMUM 18 AWG WIRE MUST BE USED FOR FIELD CONNECTIONS.

PRO-LJ/LH,1/2HP/LTB/LHAB	
MSLH2-WW	220V,50/60HZ,1Ø
REV. F	DATE: 24.08.11
TECH. HELP LINE:	
CANADA: 1-(877) 888-1116	
USA: 1-(888) 816-8584	

MICANAN
Commercial Door Opening Devices

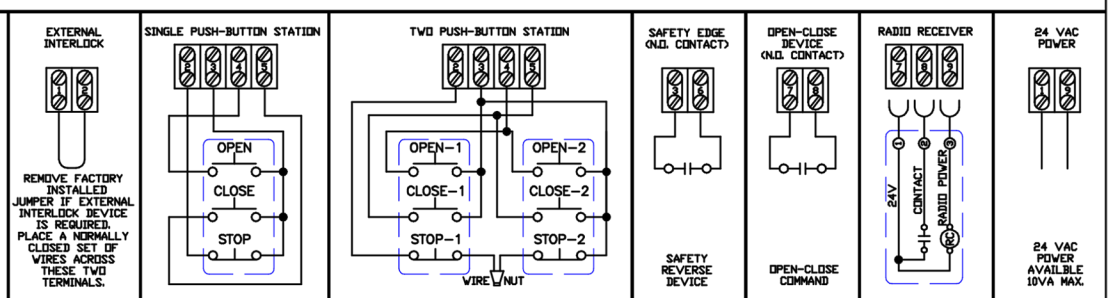

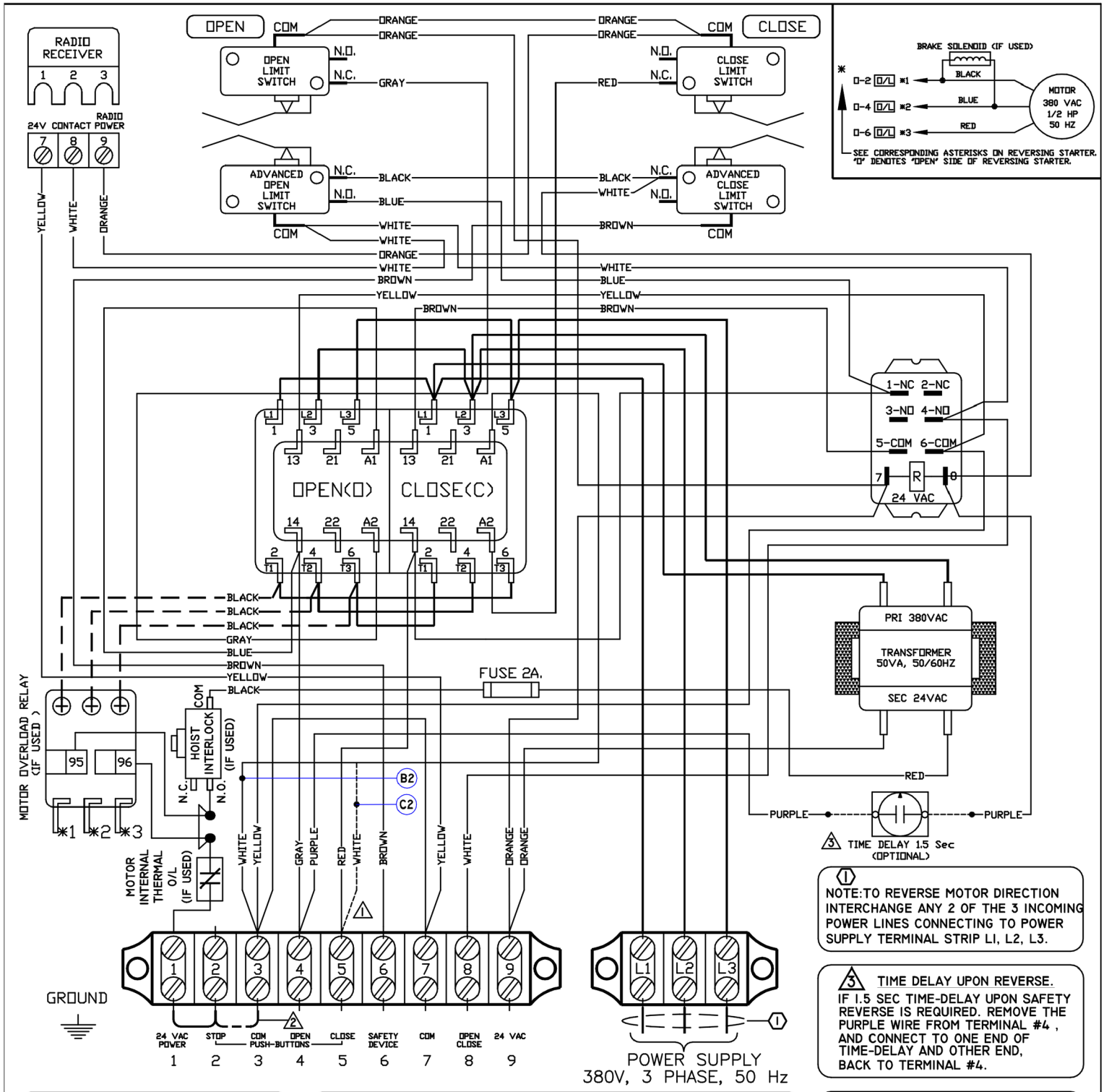

NOTE: TO REVERSE MOTOR DIRECTION INTERCHANGE ANY 2 OF THE 3 INCOMING POWER LINES CONNECTING TO POWER SUPPLY TERMINAL STRIP L1, L2, L3.

TIME DELAY UPON REVERSE. IF 1.5 SEC TIME-DELAY UPON SAFETY REVERSE IS REQUIRED. REMOVE THE PURPLE WIRE FROM TERMINAL #4, AND CONNECT TO ONE END OF TIME-DELAY AND OTHER END, BACK TO TERMINAL #4.

WARNING
MICANAN STRONGLY RECOMMENDS THE USE OF ENTRAPMENT PROTECTION SYSTEMS WHEN B2 (MOMENTARY CONTACT) WIRING IS USED.

CONTROL WIRING OPTION ON CLOSE:
THIS OPERATOR LEAVES THE FACTORY WITH A "C2" WIRING - MEANING THAT CONSTANT PRESSURE IS REQUIRED TO CLOSE THE DOOR.
IF MOMENTARY OPERATION ON CLOSE - "B2" WIRING - IS DESIRED, THEN REMOVE THE WHITE WIRE FROM TERMINAL #5 AND PLACE ON TERMINAL #3.

IF STOP BUTTON NOT USED, ADD JUMPER BETWEEN 2 & 3.

NOTE: MINIMUM 18 AWG WIRE MUST BE USED FOR FIELD CONNECTIONS.

3-PHASE PRO-LJ/LH/LT/LHA/GJ	
1/2HP,380V,50HZ	REV. E
MS300LH-WW	DATE: 29.01.07
TECH. HELP LINE:	
CANADA: 1-(877) 888-1116	
USA: 1-(888) 816-8584	

MICANAN
Commercial Door Opening Devices

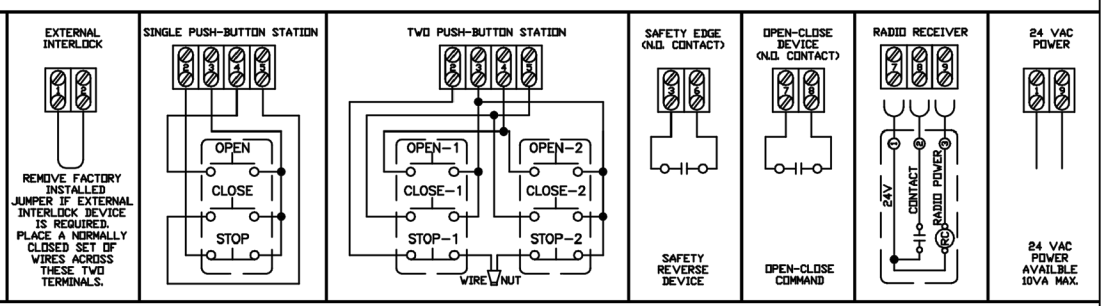

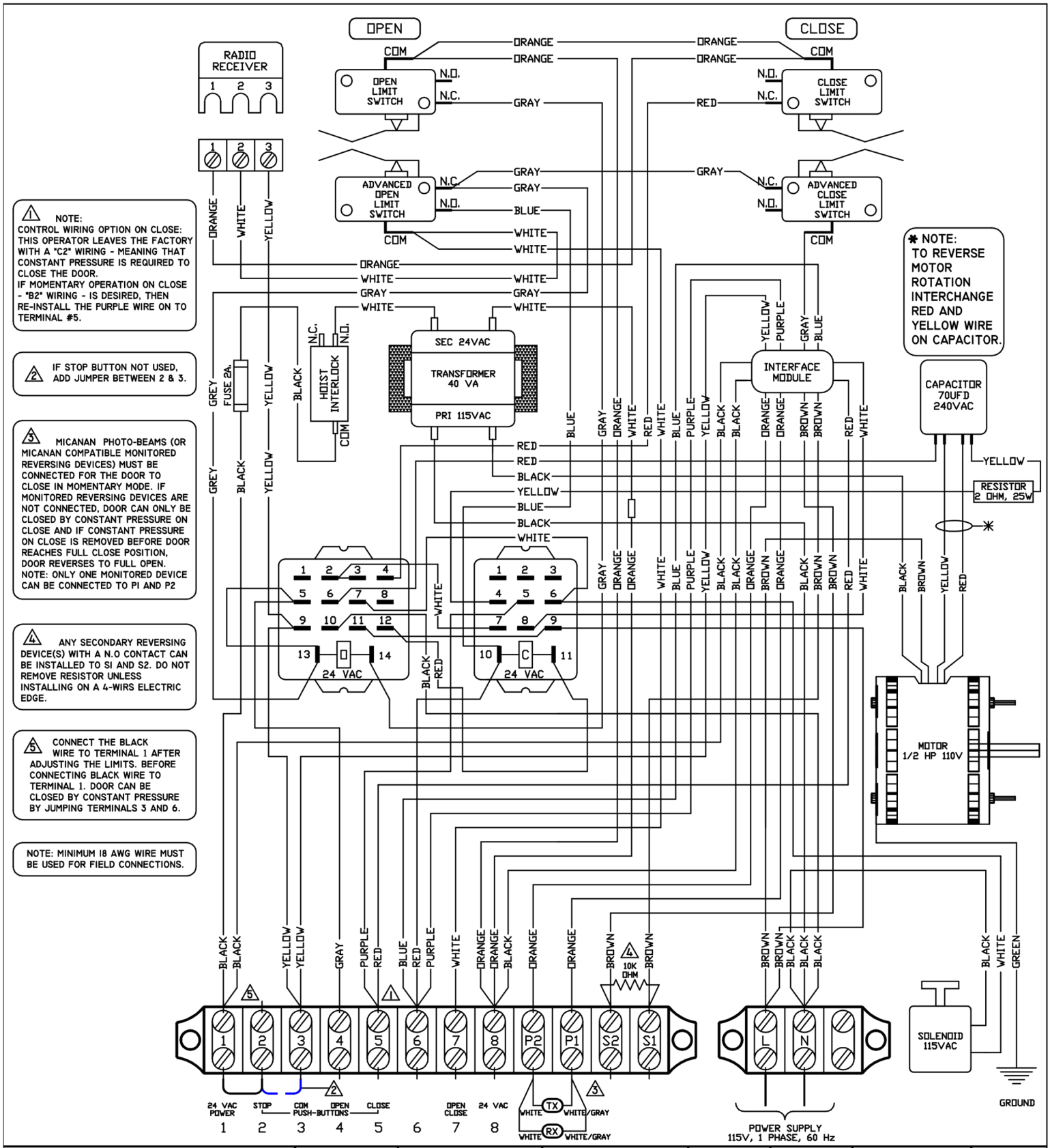

⚠1 NOTE:
CONTROL WIRING OPTION ON CLOSE: THIS OPERATOR LEAVES THE FACTORY WITH A "C2" WIRING - MEANING THAT CONSTANT PRESSURE IS REQUIRED TO CLOSE THE DOOR.
IF MOMENTARY OPERATION ON CLOSE - "B2" WIRING - IS DESIRED, THEN RE-INSTALL THE PURPLE WIRE ON TO TERMINAL #5.

⚠2 IF STOP BUTTON NOT USED, ADD JUMPER BETWEEN 2 & 3.

⚠3 MICANAN PHOTO-BEAMS (OR MICANAN COMPATIBLE MONITORED REVERSING DEVICES) MUST BE CONNECTED FOR THE DOOR TO CLOSE IN MOMENTARY MODE. IF MONITORED REVERSING DEVICES ARE NOT CONNECTED, DOOR CAN ONLY BE CLOSED BY CONSTANT PRESSURE ON CLOSE AND IF CONSTANT PRESSURE ON CLOSE IS REMOVED BEFORE DOOR REACHES FULL CLOSE POSITION, DOOR REVERSES TO FULL OPEN.
NOTE: ONLY ONE MONITORED DEVICE CAN BE CONNECTED TO P1 AND P2

⚠4 ANY SECONDARY REVERSING DEVICE(S) WITH A N.O CONTACT CAN BE INSTALLED TO S1 AND S2. DO NOT REMOVE RESISTOR UNLESS INSTALLING ON A 4-WIRS ELECTRIC EDGE.

⚠5 CONNECT THE BLACK WIRE TO TERMINAL 1 AFTER ADJUSTING THE LIMITS. BEFORE CONNECTING BLACK WIRE TO TERMINAL 1. DOOR CAN BE CLOSED BY CONSTANT PRESSURE BY JUMPING TERMINALS 3 AND 6.

NOTE: MINIMUM 18 AWG WIRE MUST BE USED FOR FIELD CONNECTIONS.

✱ NOTE:
TO REVERSE MOTOR ROTATION INTERCHANGE RED AND YELLOW WIRE ON CAPACITOR.

1-PHASE PRO-LJ/LH,1/2HP,110V	
MSLHR-IM-WW	
REV. D	DATE: 17.11.10
TECH. HELP LINE:	
CANADA: 1-(877) 888-1116	
USA: 1-(888) 816-8584	

MICANAN
Commercial Door Opening Devices

EXTERNAL INTERLOCK

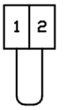

REMOVE FACTORY INSTALLED JUMPER IF EXTERNAL INTERLOCK DEVICE IS REQUIRED. PLACE A NORMALLY CLOSED SET OF WIRES ACROSS THESE TWO TERMINALS.

SINGLE PUSH-BUTTON STATION

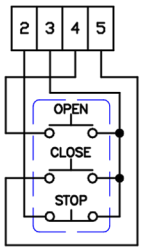

MICANAN FAIL-SAFE PHOTO BEAM

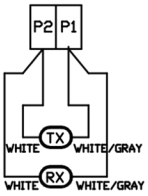

SAFETY EDGE (N.O. CONTACT)

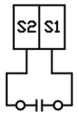

SAFETY REVERSE DEVICE

OPEN-CLOSE DEVICE (N.O. CONTACT)

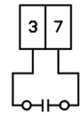

OPEN-CLOSE COMMAND

RADIO RECEIVER

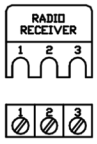

24 VAC POWER

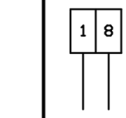

24 VAC POWER AVAILBLE 10VA MAX.

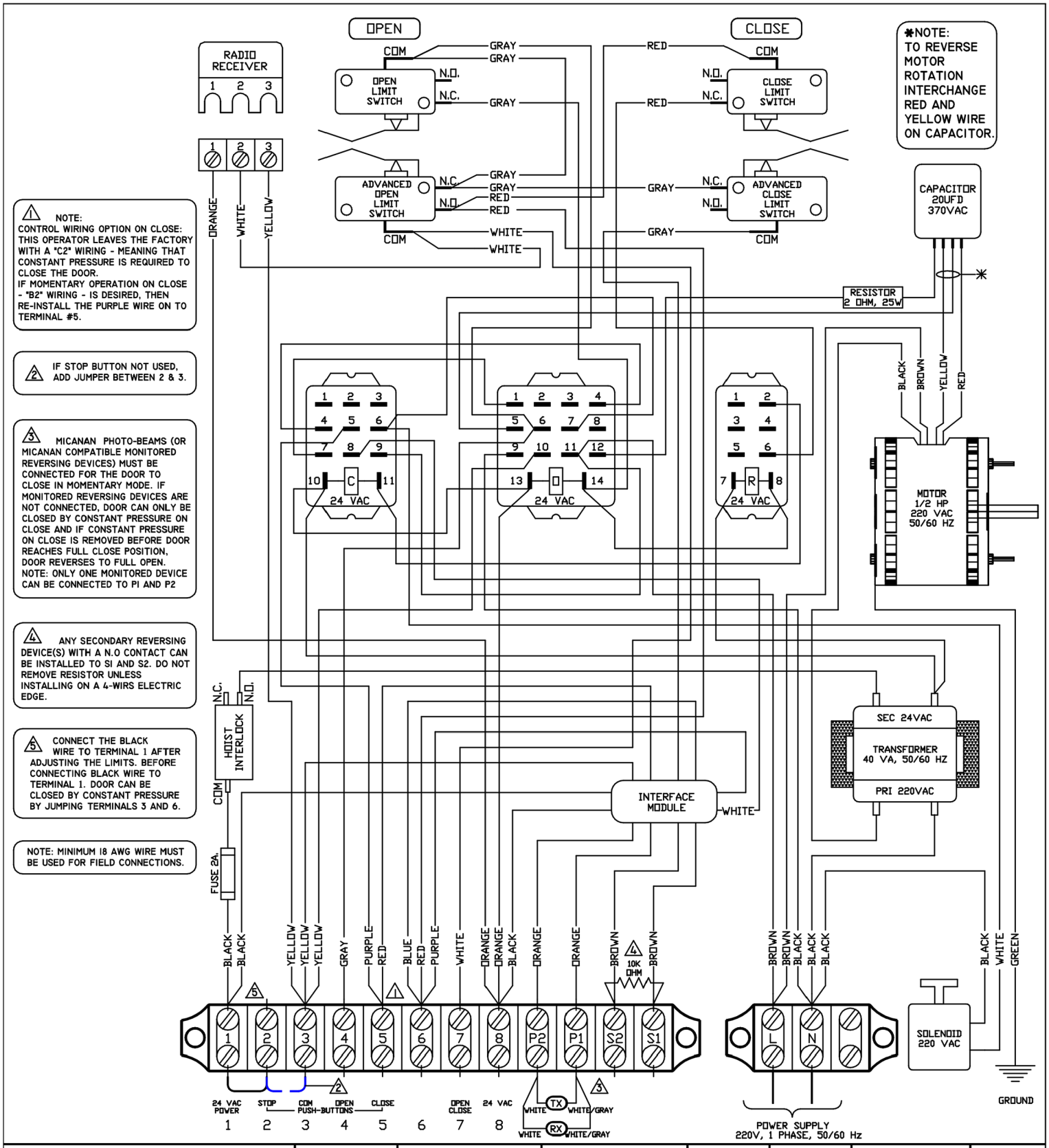

NOTE:
CONTROL WIRING OPTION ON CLOSE: THIS OPERATOR LEAVES THE FACTORY WITH A "C2" WIRING - MEANING THAT CONSTANT PRESSURE IS REQUIRED TO CLOSE THE DOOR.
IF MOMENTARY OPERATION ON CLOSE - "B2" WIRING - IS DESIRED, THEN RE-INSTALL THE PURPLE WIRE ON TO TERMINAL #5.

2 IF STOP BUTTON NOT USED, ADD JUMPER BETWEEN 2 & 3.

3 MICANAN PHOTO-BEAMS (OR MICANAN COMPATIBLE MONITORED REVERSING DEVICES) MUST BE CONNECTED FOR THE DOOR TO CLOSE IN MOMENTARY MODE. IF MONITORED REVERSING DEVICES ARE NOT CONNECTED, DOOR CAN ONLY BE CLOSED BY CONSTANT PRESSURE ON CLOSE AND IF CONSTANT PRESSURE ON CLOSE IS REMOVED BEFORE DOOR REACHES FULL CLOSE POSITION, DOOR REVERSES TO FULL OPEN.
NOTE: ONLY ONE MONITORED DEVICE CAN BE CONNECTED TO P1 AND P2

4 ANY SECONDARY REVERSING DEVICE(S) WITH A N.O CONTACT CAN BE INSTALLED TO S1 AND S2. DO NOT REMOVE RESISTOR UNLESS INSTALLING ON A 4-WIRS ELECTRIC EDGE.

5 CONNECT THE BLACK WIRE TO TERMINAL 1 AFTER ADJUSTING THE LIMITS. BEFORE CONNECTING BLACK WIRE TO TERMINAL 1. DOOR CAN BE CLOSED BY CONSTANT PRESSURE BY JUMPING TERMINALS 3 AND 6.

NOTE: MINIMUM 18 AWG WIRE MUST BE USED FOR FIELD CONNECTIONS.

PRO-LJ/LH,1/2HP,/LTB/LHAB
MSLH2-IM-WW
REV. B DATE: 29.08.12
TECH. HELP LINE:
CANADA: 1-(877) 888-1116
USA: 1-(888) 816-8584

MICANAN
Commercial Door Opening Devices

EXTERNAL INTERLOCK

REMOVE FACTORY INSTALLED JUMPER IF EXTERNAL INTERLOCK DEVICE IS REQUIRED. PLACE A NORMALLY CLOSED SET OF WIRES ACROSS THESE TWO TERMINALS.

SINGLE PUSH-BUTTON STATION

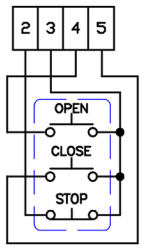

MICANAN FAIL-SAFE PHOTO BEAM

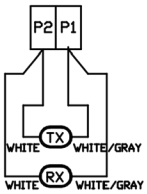

SAFETY EDGE (N.O. CONTACT)

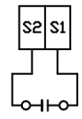

SAFETY REVERSE DEVICE

OPEN-CLOSE DEVICE (N.O. CONTACT)

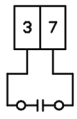

OPEN-CLOSE COMMAND

RADIO RECEIVER

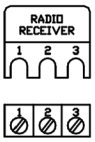

24 VAC POWER

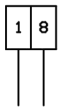

24 VAC POWER AVAILBLE 10VA MAX.

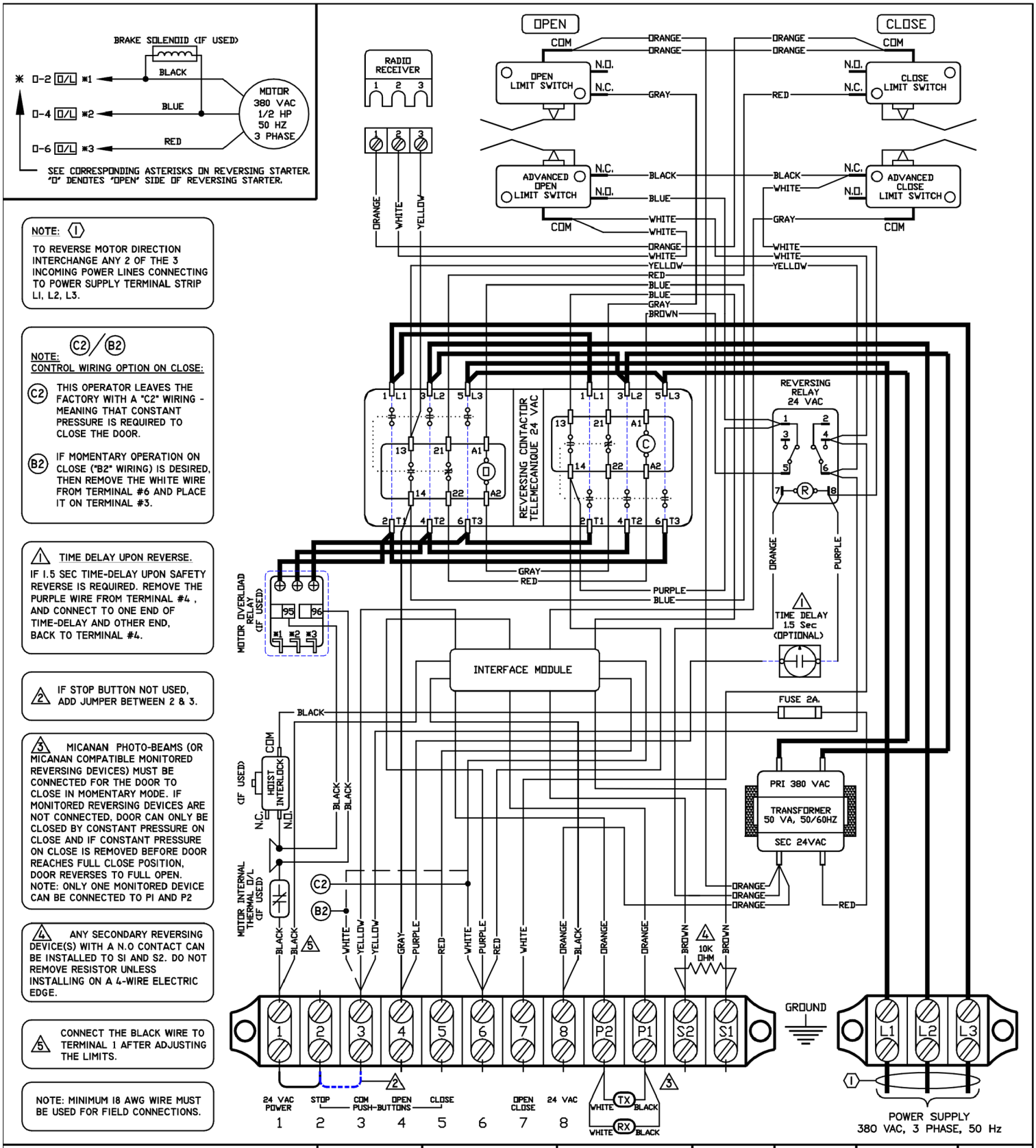

NOTE: (1)

TO REVERSE MOTOR DIRECTION INTERCHANGE ANY 2 OF THE 3 INCOMING POWER LINES CONNECTING TO POWER SUPPLY TERMINAL STRIP L1, L2, L3.

(C2)/(B2)

NOTE:
CONTROL WIRING OPTION ON CLOSE:

(C2) THIS OPERATOR LEAVES THE FACTORY WITH A "C2" WIRING - MEANING THAT CONSTANT PRESSURE IS REQUIRED TO CLOSE THE DOOR.

(B2) IF MOMENTARY OPERATION ON CLOSE ("B2" WIRING) IS DESIRED, THEN REMOVE THE WHITE WIRE FROM TERMINAL #6 AND PLACE IT ON TERMINAL #3.

(1) TIME DELAY UPON REVERSE.
IF 1.5 SEC TIME-DELAY UPON SAFETY REVERSE IS REQUIRED. REMOVE THE PURPLE WIRE FROM TERMINAL #4 , AND CONNECT TO ONE END OF TIME-DELAY AND OTHER END, BACK TO TERMINAL #4.

(2) IF STOP BUTTON NOT USED, ADD JUMPER BETWEEN 2 & 3.

(3) MICANAN PHOTO-BEAMS (OR MICANAN COMPATIBLE MONITORED REVERSING DEVICES) MUST BE CONNECTED FOR THE DOOR TO CLOSE IN MOMENTARY MODE. IF MONITORED REVERSING DEVICES ARE NOT CONNECTED, DOOR CAN ONLY BE CLOSED BY CONSTANT PRESSURE ON CLOSE AND IF CONSTANT PRESSURE ON CLOSE IS REMOVED BEFORE DOOR REACHES FULL CLOSE POSITION, DOOR REVERSES TO FULL OPEN. NOTE: ONLY ONE MONITORED DEVICE CAN BE CONNECTED TO P1 AND P2

(4) ANY SECONDARY REVERSING DEVICE(S) WITH A N.O CONTACT CAN BE INSTALLED TO S1 AND S2. DO NOT REMOVE RESISTOR UNLESS INSTALLING ON A 4-WIRE ELECTRIC EDGE.

(5) CONNECT THE BLACK WIRE TO TERMINAL 1 AFTER ADJUSTING THE LIMITS.

NOTE: MINIMUM 18 AWG WIRE MUST BE USED FOR FIELD CONNECTIONS.

3-PHASE PRO-LJ/LH/LT/LHA/GJ	
1/2HP,380V,50HZ	REV. A
MS300LH-IM-WW	DATE: 20.01.11
TECH. HELP LINE:	
CANADA: 1-(877) 888-1116	
USA: 1-(888) 816-8584	

MICANAN
Commercial Door Opening Devices

EXTERNAL INTERLOCK

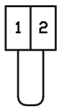

REMOVE FACTORY INSTALLED JUMPER IF EXTERNAL INTERLOCK DEVICE IS REQUIRED. PLACE A NORMALLY CLOSED SET OF WIRES ACROSS THESE TWO TERMINALS.

SINGLE PUSH-BUTTON STATION

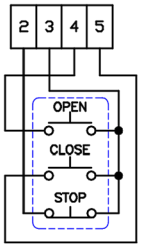

MICANAN MONITORED PHOTO BEAM

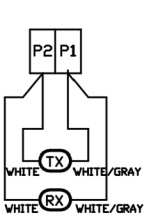

SAFETY EDGE (N.O. CONTACT)

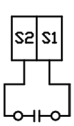

SAFETY REVERSE DEVICE

OPEN-CLOSE DEVICE (N.O. CONTACT)

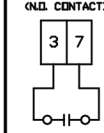

OPEN-CLOSE COMMAND

RADIO RECEIVER

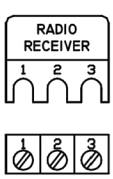

24 VAC POWER

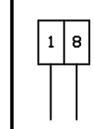

24 VAC POWER AVAILBLE 10VA MAX.

1. IF STOP BUTTON USED, REMOVE JUMPER BETWEEN "STOP" AND "COM" TERMINALS.

2. MICANAN MONITORED PHOTO BEAMS OR MICANAN COMPATIBLE MONITORED SAFETY DEVICES MUST BE CONNECTED TO P1 AND P2 FOR THE DOOR TO CLOSE IN MOMENTARY MODE (B2 OR TS). IF MONITORED SAFETY DEVICES ARE NOT CONNECTED, DOOR CAN ONLY BE CLOSED BY CONSTANT PRESSURE AND IF CONSTANT PRESSURE IS REMOVED BEFORE DOOR REACHES FULL CLOSE POSITION, DOOR REVERSES TO FULL OPEN POSITION.
NOTE: ONLY ONE MONITORED DEVICE CAN BE CONNECTED TO P2 AND P1.

3. ONE OR MORE SECONDARY SAFETY DEVICES (WITH A N.O. CONTACT) CAN BE CONNECTED TO S1 AND S2.

4. DOT NOT REMOVE RESISTOR UNLESS INSTALLING ON A 4-WIRE ELECTRIC EDGE.

5. REFER TO INSTALLATION MANUAL FOR APPROPRIATE SURGE PROTECTOR RATINGS.

6. OPERATOR IS SHIPPED FROM FACTORY IN CONSTANT PRESSURE TO CLOSE (C2) MODE OF OPERATION. IF MOMENTARY ON CLOSE IS REQUIRED, REMOVE THE JUMPER FROM PIN"C2" AND PLACE IT ON PIN"B2". IF TIMER TO CLOSE IS REQUIRED, PLACE THE JUMPER ON PIN"TS".

7. TIMER TO CLOSE ADJUSTMENT: DEFAULT SETTING OF TIMER TO CLOSE IS 3 SEC. TO MODIFY THIS VALUE, PRESS "TIMER PROGRAM" BUTTON UNTIL DESIRED VALUE IS REACHED. REFER TO ON BOARD LED INDEX FOR TIMER VALUE INDICATION.

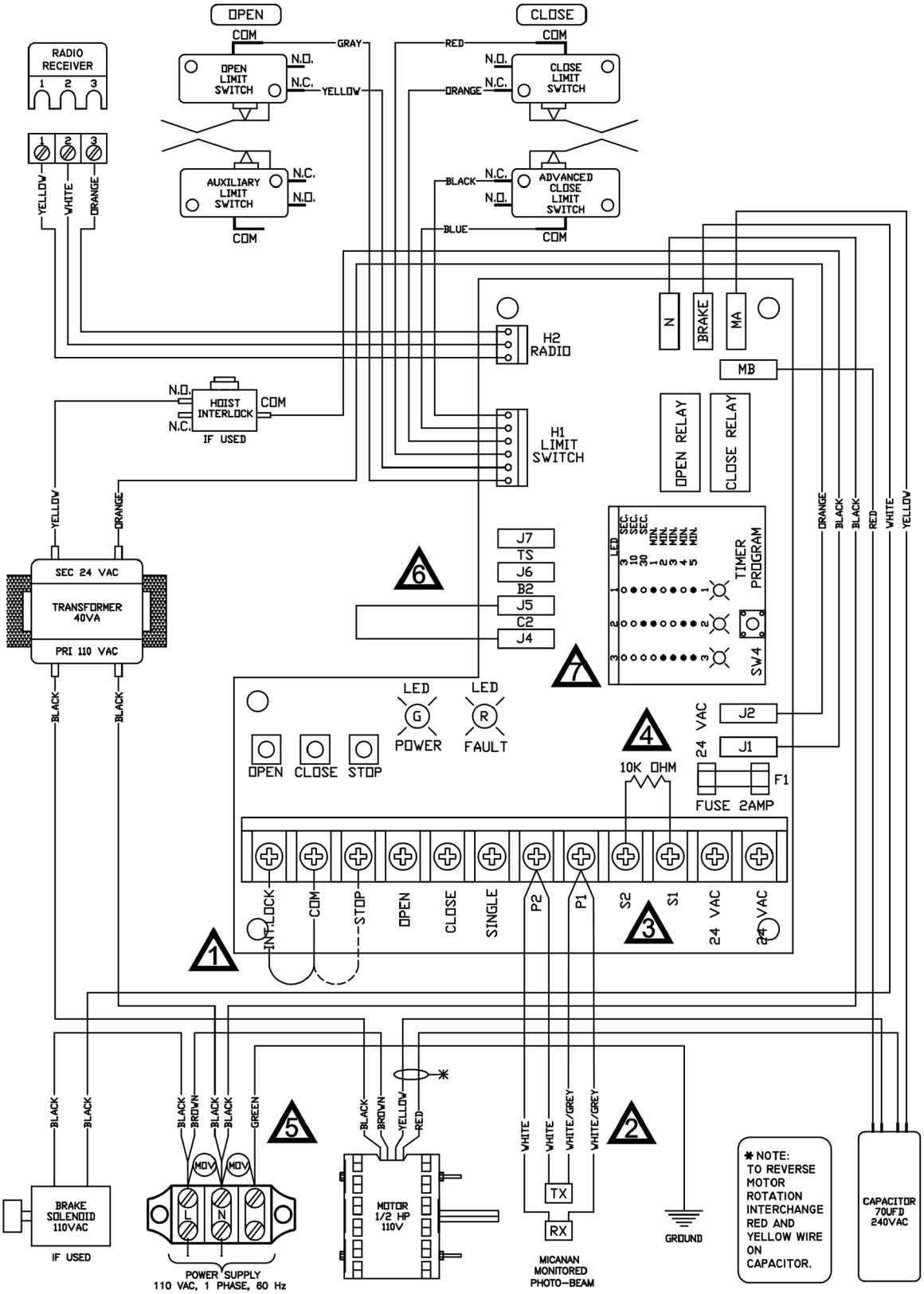

* NOTE: TO REVERSE MOTOR ROTATION INTERCHANGE RED AND YELLOW WIRE ON CAPACITOR.

1-PHASE 110 VAC
MSLLHR110V-WW
REV. C | DATE: 02.01.13
TECH. HELP LINE:
CANADA: 1-(877) 888-1116
USA: 1-(888) 816-8584

MICANAN
Commercial Door Opening Devices

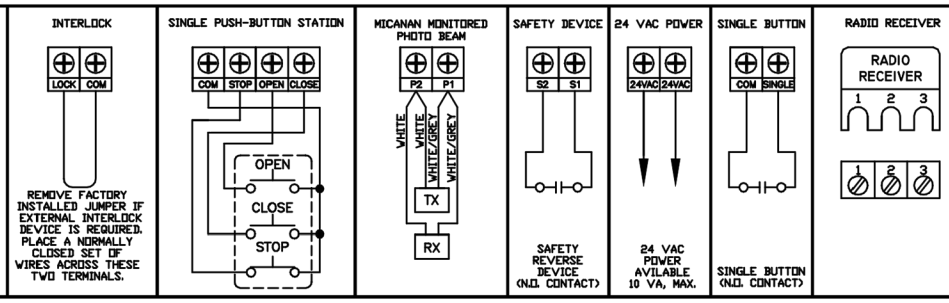

1. IF STOP BUTTON USED, REMOVE JUMPER BETWEEN "STOP" AND "COM" TERMINALS.

2. MICANAN MONITORED PHOTO BEAMS OR MICANAN COMPATIBLE MONITORED SAFETY DEVICES MUST BE CONNECTED TO PI AND P2 FOR THE DOOR TO CLOSE IN MOMENTARY MODE (B2 OR TS). IF MONITORED SAFETY DEVICES ARE NOT CONNECTED, DOOR CAN ONLY BE CLOSED BY CONSTANT PRESSURE AND IF CONSTANT PRESSURE IS REMOVED BEFORE DOOR REACHES FULL CLOSE POSITION, DOOR REVERSES TO FULL OPEN POSITION.
NOTE: ONLY ONE MONITORED DEVICE CAN BE CONNECTED TO P2 AND PI.

3. ONE OR MORE SECONDARY SAFETY DEVICES (WITH A N.O. CONTACT) CAN BE CONNECTED TO SI AND S2.

4. DOT NOT REMOVE RESISTOR UNLESS INSTALLING ON A 4-WIRE ELECTRIC EDGE.

5. REFER TO INSTALLATION MANUAL FOR APPROPRIATE SURGE PROTECTOR RATINGS.

6. OPERATOR IS SHIPPED FROM FACTORY IN CONSTANT PRESSURE TO CLOSE (C2) MODE OF OPERATION. IF MOMENTARY ON CLOSE IS REQUIRED, REMOVE THE JUMPER FROM PIN"C2" AND PLACE IT ON PIN"B2". IF TIMER TO CLOSE IS REQUIRED, PLACE THE JUMPER ON PIN"TS".

7. TIMER TO CLOSE ADJUSTMENT: DEFAULT SETTING OF TIMER TO CLOSE IS 3 SEC. TO MODIFY THIS VALUE, PRESS "TIMER PROGRAM" BUTTON UNTIL DESIRED VALUE IS REACHED. REFER TO ON BOARD LED INDEX FOR TIMER VALUE INDICATION.

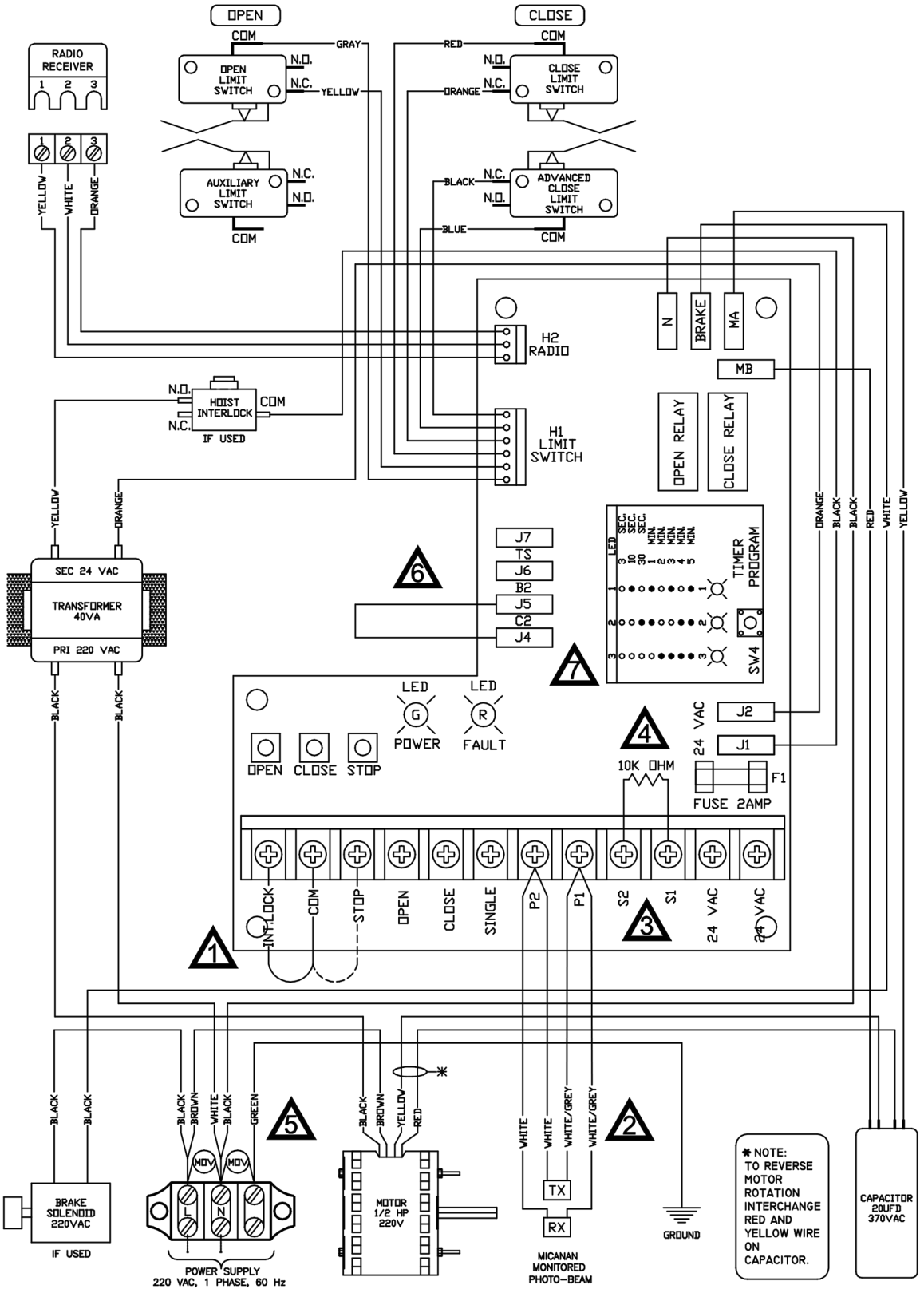

I-PHASE 220 VAC
MSLLHR220V-WW
REV. A | DATE: 01.04.13
TECH. HELP LINE:
CANADA: 1-(877) 888-1116
USA: 1-(888) 816-8584

MICANAN
Commercial Door Opening Devices

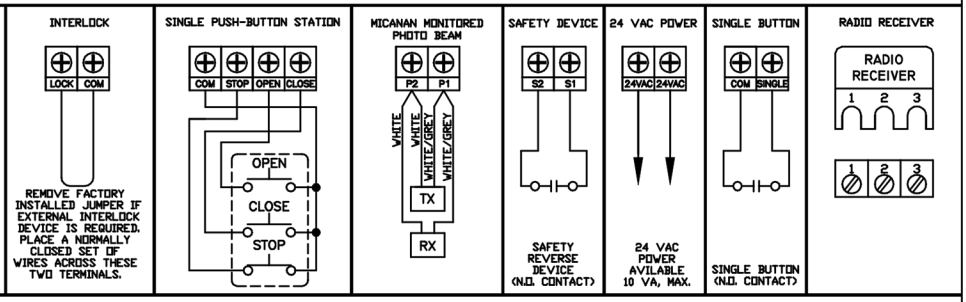

2009

HEAD OFFICE

1380 St-Regis
Dorval, QC Canada
H9P 2T5

Tel: (514) 822 1116
Toll Free: 1(877) 888 1116

CHICAGO

721 W. Racquet Dr
Addison, IL USA
60101

Tel: (630) 501 1909
Toll Free: 1 (844) 542 9025

ATLANTA

2885 N. Berkeley Lake Rd.
Suite 7, Duluth, GA USA
30096

Tel: (678) 584 2543
Toll Free: 1 (800) 798 2543

PHOENIX

1236 W. Southern Ave.
Suite 104, Tempe, AZ USA
85282

Tel: (480) 557 0070
Toll Free: 1 (888) 816 8584